AVISTART 6501

Remote Engine Starter
& Security System

Installation Manual

AVITAL

A DIVISION OF CLIFFORD ELECTRONICS

⚠ WARNING ⚠

- **Always exercise caution and common sense when operating the AviStart system.**
- **This product is intended for vehicles with fuel-injection and automatic transmissions only. NEVER attempt to remote start a vehicle with a manual (stick shift) transmission. Serious injury may occur with improper use.**
- **NEVER attempt to remote start the engine while anyone (including pets) is in the vehicle.**
- **NEVER attempt to remote start the engine while the vehicle is in an enclosed area without sufficient ventilation.**
- **NEVER attempt to remote start the engine while the keys are in the ignition.**
- **Always be sure the gearshift selector is in "Park" and the emergency brake is on before attempting to remote start the vehicle.**
- **Keep the AviStart remote controls out of the reach of children.**
- **Whenever the vehicle is being serviced or valet parked, the system should be placed in Protected Valet Mode to prevent accidental or unauthorized remote starting.**

Table of Contents

Important Information 2
Recommended Installation Tools 2
Recommended Procedures 2
Main Wiring Diagram - 16 Pin 3
Main Wiring Diagram - 14 Pin 4
Satellite Relay Module Diagram 5
Pin Connectors 6
Installation Procedures. 7
Control Unit 7
RangeMaster™ Super Heterodyne Receiver Module. 7
Wireloom 7
LED Indicator 8
Valet Switch. 8
Zone^{2}™ Impact Sensor 8
Additional Sensor Input 8
Alarm Armed Signal (-) Output 8
Brake Lights (Mandatory) 9
Parking Lights 9
Reverse Light 9
Interior Light Illumination 10
Channel 2 Accessory Output (Trunk Release) 10
Channel 6 Accessory Output 10
Channel 9 Accessory Output 10
Remote Start Armed Signal (-) Output 10
Factory Alarm Disarm (-) Output 10
Factory Alarm Rearm 11
Accessory Remote Start (-) Input 11
Glow Plug Light Input 12
Trunk Switch 12
Ignition Switch Connections 12
Tach Wire (RPM Monitoring). 14
Door Lock/Unlock 14
Remote Engine Start Neutral Safety Switch Bulletin 15
Door Lock Diagrams 18
Hood Switch (Mandatory) 22
Siren 22
Power and Ground Connections 22
Mandatory RPM Programming 23
Programmable Features. 24
Programming Table for System Features 25
Programming Table for Remote Controls 26

Important Information

Recommended Installation Tools

Voltmeter

Wire Strippers

Electric Drill & Bits

Phillips Screwdriver

Convoluted Tubing *

Solder Gun *

Wire Crimpers

Shrink Tube or Electrical Tape

** Optional*

Recommended Procedures

1. Test all circuits with a voltmeter.
2. Make all wiring connections with the supplied solderless crimp connectors. DO NOT twist wires or use scotch-lok connectors.
3. Route the small and large **RED, RED/WHITE** and **BLACK** wires from the control unit directly to the battery.
4. Keep extensions as short as possible. Use same gauge wires for short extensions and larger gauge wires for longer extensions.
5. Before installing, discuss the placement of the LED indicator and valet switch with the vehicle owner.
6. DO NOT disconnect the battery cables. Make all connections by removing the bolts from the cable clamps without detaching the clamp.
7. Turn off dome light or remove dome light fuse to prevent battery drain.

This device complies with Part 15 of the FCC rules. Any changes or modifications made to the system without the express approval of Avital Technologies, Inc. could void the user's authority to operate this equipment.

Main Wiring Diagram - 16 Pin

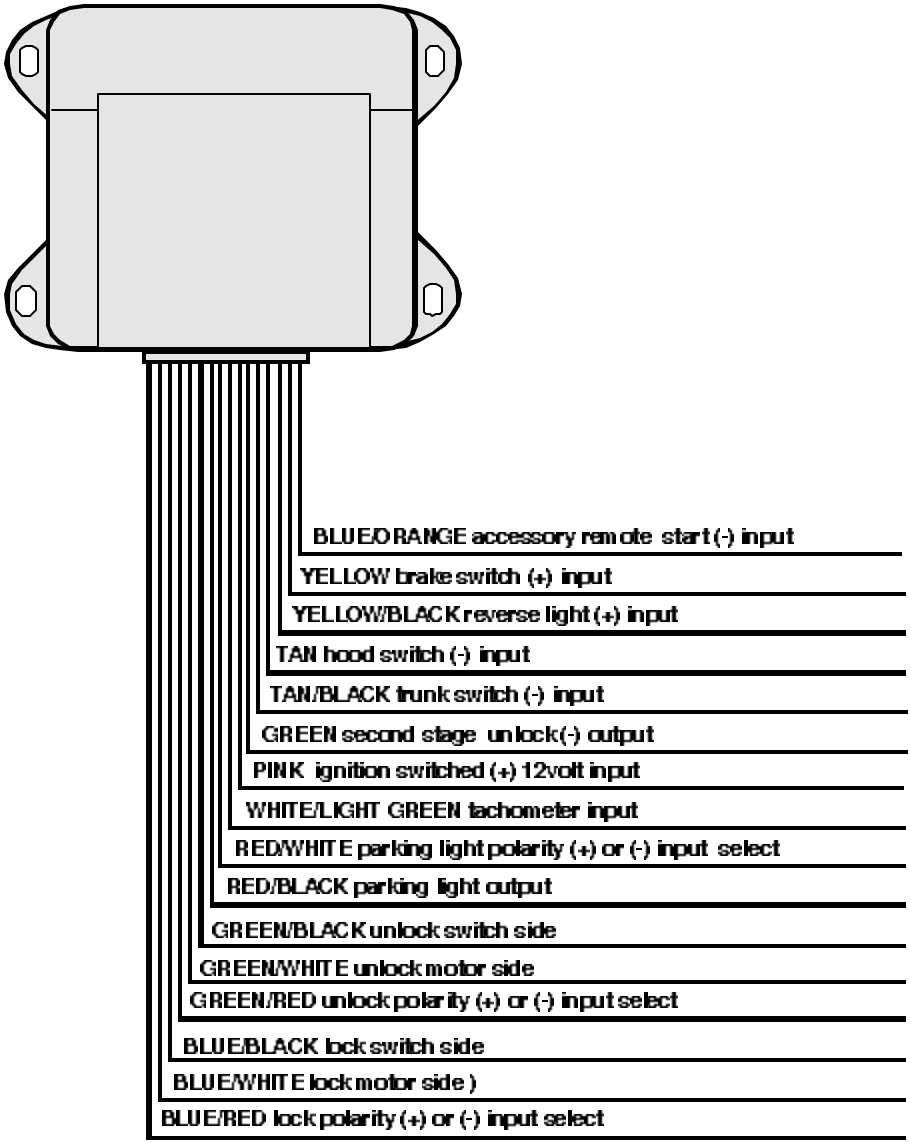

Main Wiring Diagram - 14 Pin

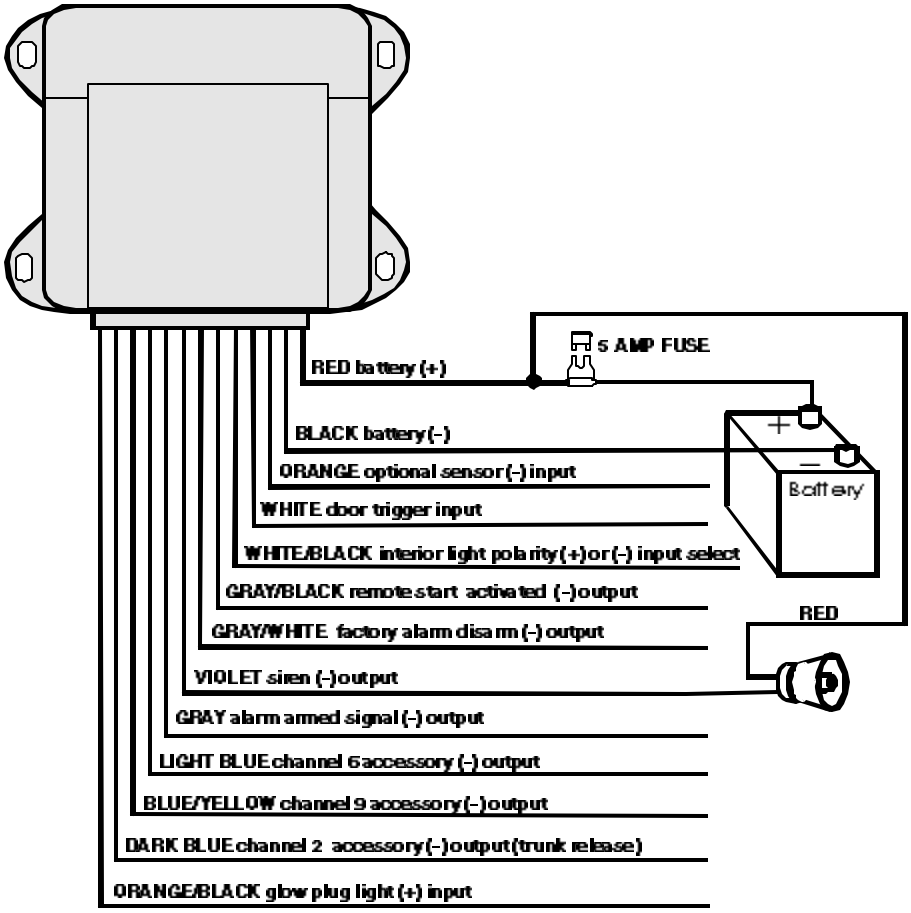

Satellite Relay Module Diagram

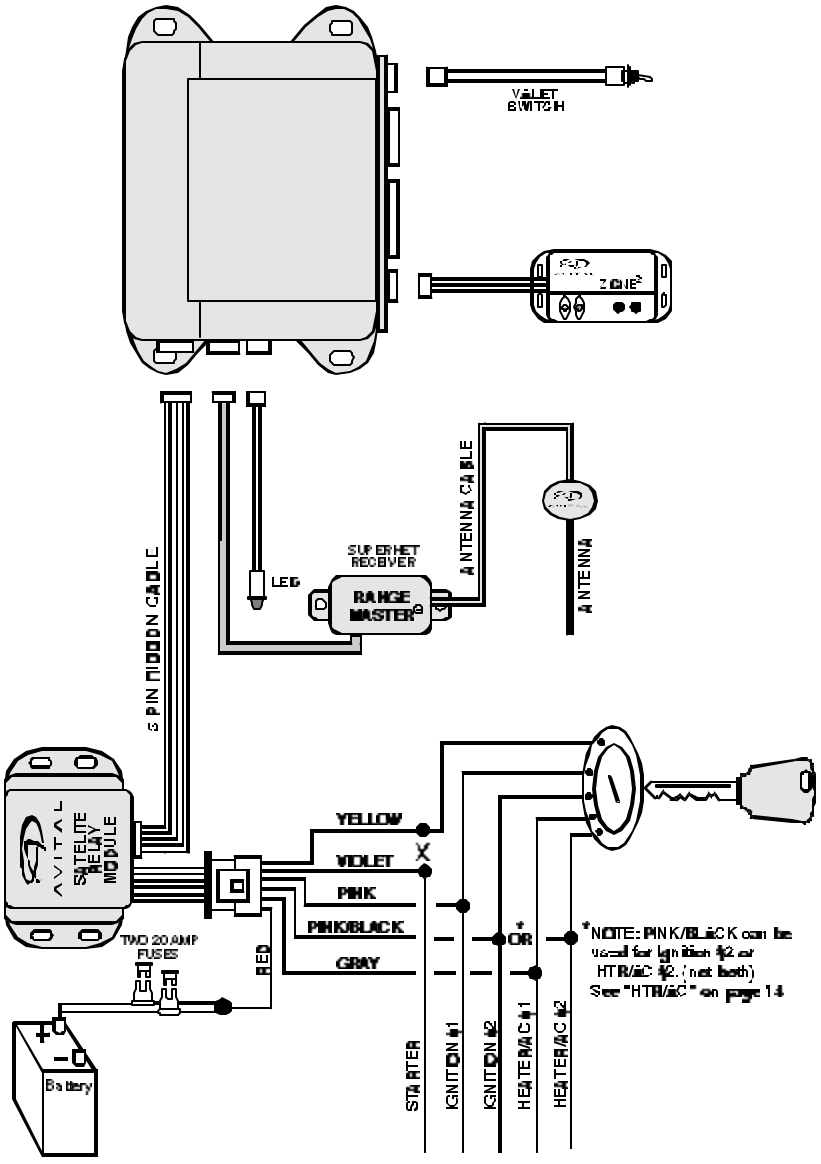

16 Pin Connector

Pin Number	Wire Color	Description
1	**BLUE / ORANGE**	Accessory Remote Start (-) Input
2	**YELLOW**	Brake Switch (+) Input
3	**YELLOW / BLACK**	Reverse Light (+) Input
4	**TAN**	Hood Switch (-) Input
5	**TAN / BLACK**	Trunk Switch (-) Input
6	**GREEN**	Second Stage Unlock (-) Output
7	**PINK**	Ignition Switched +12 Volt Input
8	**WHITE / LIGHT GREEN**	Tachometer Input
9	**RED / WHITE**	Parking Light Polarity (+) or (-) Input Select
10	**RED / BLACK**	Parking Light Output
11	**GREEN / BLACK**	Unlock Switch Side
12	**GREEN / WHITE**	Unlock Motor Side
13	**GREEN / RED**	Unlock Polarity (+) or (-) Input Select
14	**BLUE / BLACK**	Lock Switch Side
15	**BLUE / WHITE**	Lock Motor Side
16	**BLUE / RED**	Lock Polarity (+) or (-) Input Select

14 Pin Connector

Pin Number	Wire Color	Description
1	**GRAY**	Alarm Armed Signal (-) Output
2	**GRAY / BLACK**	Remote Start Activated (-) Output
3	**GRAY / WHITE**	Factory Alarm Disarm (-) Output
4	**DARK BLUE**	Channel 2 (-) Output (Trunk Release)
5	**LIGHT BLUE**	Channel 6 (-) Output
6	**BLUE / YELLOW**	Channel 9 (-) Output
7		Not Used
8	**RED**	Battery (+)
9	**WHITE**	Door Trigger
10	**VIOLET**	Siren / Horn (-) Output
11	**WHITE / BLACK**	Interior Light Polarity (+) or (-) Input Select
12	**BLACK**	Battery (-)
13	**ORANGE**	Optional Sensor (-) Input
14	**ORANGE/BLACK**	Glow Plug Light (+) Input

6 Pin Connector

Pin Number	Wire Color	Description
1	**YELLOW**	Starter Interrupt Switch Side
2	**GRAY**	Heater / AC Output
3	**VIOLET**	Starter Interrupt Starter Side
4	**PINK**	Ignition Output
5	**RED**	Battery (+)
6	**PINK/BLACK**	Selectable 2nd Ignition/Heater Output

Installation Procedures

Control Unit

1. Select a location under the dash that will allow you to use the tie wraps to securely fasten the control unit.
2. Mount the control unit as high as possible to ensure maximum security.
3. Do not mount the control unit near moving parts.
4. Avoid areas that are in the direct path of air blowing from the vents.
5. Route wires from this point, leaving slack for ease of service.

RangeMaster™ Super Heterodyne Receiver Module

1. Plug the receiver module **WHITE** connector into the control unit**WHITE** plug.
2. Use tie wraps to fasten the receiver module as far from the control unit as possible.
3. Route the antenna cable up through the driver side windshield pillar, behind the headliner and behind the rear view mirror.
4. Fasten the antenna to the windshield with the attached adhesive tape. Attach the antenna vertically so the rubber tip on the end of the antenna is facing downward.

Wireloom

1. Plug the wirelooms securely into the control unit and satellite relay module.
2. Route wires from the control module and satellite relay module directly to each connection point.
3. Separate the small and large **RED**, **RED/WHITE**, **BLACK**, **TAN**, **VIOLET** and **WHITE/GREEN** wires.
4. Sleeve these wires with vinyl tubing or electrical tape and route them through an existing rubber grommet into the engine compartment.
5. If an existing grommet is not available, drill a hole and install a snap grommet.

LED Indicator

1. Discuss placement with the owner.
2. Choose a location that is visible from both sides of the vehicle.
3. Drill a ¼" hole.
4. Route the LED wires through the hole and press LED into place.
5. Route the LED wires to the control unit.
6. Plug the **RED** LED connector into the control unit **RED** plug.

Valet Switch

1. Discuss placement with the owner.
2. Choose a location for the valet switch that is hidden, but convenient for the owner to access.
3. Drill a ¼" hole and mount the switch.
4. Route the valet switch wires to the control unit.
5. Plug the valet switch **WHITE** connector into the control unit **WHITE** plug.

Zone²™ Impact Sensor

The sensor must be firmly mounted on a solid metal surface inside the vehicle. We recommend tie wrapping the sensor to the steering column housing or steering column support bracket. DO NOT mount the sensor near moving parts or in the direct path of an air duct opening.

1. Plug the impact sensor **BLUE** 4-pin connector into the control unit **BLUE** 4-pin connector.
2. Route the impact sensor harness to the chosen mounting location.
3. Using the long tie wraps supplied, securely fasten the impact sensor allowing access to the adjustment screws.

Additional Sensor Input

The **ORANGE** wire is a (-) trigger input with a 5 second arming delay. This input can be used for optional sensors such a glass sensor, radar sensor or any other type of sensor that provides a (-) ground output when triggered.

Alarm Armed Signal (-) Output

The **GRAY** wire will provide a continual 300 M.A. output whenever the alarm is armed. This output can be used for voice modules, window roll-up modules and any other optional accessory that requires a (-) output when the alarm is armed.

Brake Lights (Mandatory)

> **CAUTION** : As a safety feature, the unit monitors the brake light to prevent an unauthorized driver from driving the car and to switch to normal engine operating condition. For this reason, the YELLOW brake light input wire must be connected and the brake light must be in working condition or the remote start will not operate properly.

1. Turn the ignition key to the "ON" position, then press the brake pedal and make sure the brake light illuminates.
2. Use a voltmeter to find the one wire at the brake light switch (usually located on the upper brake pedal arm) that shows +12 volts when you press the brake pedal and 0 volts when the brake pedal is not depressed.
3. Connect the 18 ga **YELLOW** wire to the vehicle brake light switch wire.

Parking Lights

1. If the parking lights are positive trigger, connect the **RED/WHITE** wire to the battery positive (+) terminal through the 20 amp fuse assembly.

   NOTE: Do not connect the RED/WHITE wire to the control unit RED wire.

2. If the parking lights are negative (-) trigger, connect the **RED/WHITE** wire to control unit **BLACK** wire.
3. Connect the **RED/BLACK** wire to the vehicle parking light wire.

Reverse Light

> **CAUTION** : Some vehicles allow you to remove the gear shift selector from "Park" even while the ignition key is not on. As a safety feature, the system will monitor the reverse wire. If the vehicle is removed from "Park" while in the remote start mode, the system will shut down immediately.

1. Set the parking brake.
2. Turn the ignition key to the "ON" position and adjust the gear shift selector to "Reverse."
3. Use a voltmeter to find the wire that will show +12 volts in "Reverse" and 0 volts in "Park."
4. Connect the **YELLOW/BLACK** wire to the vehicle's reverse light wire.

Interior Light Illumination

1. Connect the **WHITE** wire to the vehicle door trigger wire.
2. If the door trigger is negative, connect the **WHITE/BLACK** wire to ground.
3. If the door trigger wire is positive switching, connect the **WHITE/BLACK** wire to a fused constant +12 volt source. Do note use the alarm **RED** wire.

Channel 2 Accessory Output (Trunk Release)

The **DARK BLUE** wire provides a 0.75 second ground output when the TRUNK button is pressed for 1-2 seconds while the alarm is disarmed only. If the TRUNK button is continually pressed, the output will stay at ground as long as the button is held. Most factory trunk releases are positive trigger and require an optional relay.

Channel 6 Accessory Output

The **LIGHT BLUE** wire provides a 0.75 second ground output when the ARM/DISARM and SILENT buttons are pressed at the same time for 1-2 seconds. If the ARM/DISARM and SILENT buttons are continually pressed, the output will stay at ground as long as the buttons are held. This output can be used for optional accessories such as window roll-up/down or any other accessory requiring a (-) input.

Channel 9 Accessory Output

The **BLUE/YELLOW** wire provides a 0.75 second output when the SILENT and START buttons are pressed at the same time for 1-2 seconds. If the SILENT and START button are continually pressed, the output will stay at ground as long as the buttons are held. This output can be used for optional accessories such as a fuel filler door release or any other accessory requiring a (-) input.

Remote Start Armed Signal (-) Output

The **GRAY/BLACK** wire will provide a continual ground output for as long as the vehicle is in the remote start mode. This output can be used for additional ignition, starter or heater/AC relays, as well as VATS, Passlok and Passkey bypass.

Factory Alarm Disarm (-) Output

The **GRAY/WHITE** wire will provide a 0.75 second ground output when the START button is pressed.

1. Arm the vehicle factory alarm system.

Continued on next page.

2. Use a volt/ohmmeter to locate the one wire that will show ground only when the driver door key cylinder is held in the unlock position.

   NOTE: most factory alarm disarm wires will show 8-12 volts while armed. A few vehicle disarm wires will rest at a neutral state while armed. Regardless of type, both types will change to ground when the key cylinder is turned to unlock.

3. Connect the **GRAY/WHITE wire to the factory alarm disarm wire.**

Factory Alarm Rearm

There are two types of factory alarm systems that the AviStart can rearm.

System #1

This type of system has a designated alarm arm wire that requires a (-) pulse to arm the alarm

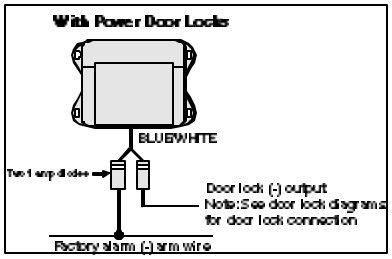

1. Use a volt/ohmmeter to find the factory arm wire that will show (-) ground while the driver door key cylinder is turned to the "LOCK" position. If you are interfacing with the vehicle power door locks, use the diagram at right. If not, proceed to step #2.
2. If you are not interfacing with the vehicle power door locks, connect the AviStart **BLUE/WHITE** wire to the vehicle arm wire. The**BLUE/WHITE** wire will provide a single 2-second (-) output five seconds after the engine is shut off with the remote control or timed out. (Some vehicles may require 2 pulses. See "Programmming Table for System Features" on page 25.)

System #2

This type of system does not have a designated "arm" wire. To arm the alarm, you must lock the doors while the interior lights are on.

1. Simply connect to the interior lights and door locks as indicated in the manual.

Accessory Remote Start (-) Input

The **BLUE/ORANGE** wire will accept a (-) input pulse to activate the remote start.

Glow Plug Light Input

The AviStart can start a diesel engine by one of two methods.

Pre-ignition

The module can be programmed to turn the ignition "ON" for 15 seconds before the starter engages. This will allow the glow plugs time to warm up and the glow plug light to turn off.

Glow Plug Light Monitoring

The glow plug light (+) input wire will monitor the glow plug light in the dashboard. When a remote start is attempted, the ignition will turn on and when the glow plug light turns "OFF" the engine will start

1. Locate the glow plug light wire that will show (+) 12 volts while the ignition key is on and the glow plug light wire is illuminated.
2. Connect the AviStart **ORANGE/BLACK** wire to the vehicle glow plug might wire.

   NOTE: Do not use both "pre-ignition" and "glow plug light monitoring" at the same time (use one or the other).

Trunk Switch

1. Locate the vehicle trunk switch that shows ground when the trunk is open only.
2. Connect the alarm module **TAN/BLACK** wire to the vehicle trunk switch wire.
3. If the vehicle does not have a trunk switch, install a pin switch and connect it to the alarm module **TAN/BLACK** wire.

Ignition Switch Connections

NOTE: Because these wires can draw high current, we recommend that they be soldered and shrink tubed or taped. If only one PINK wire is needed, tape the end of the second PINK wire to prevent a short circuit. The main control module has an 18 ga PINK wire that must be connected to the vehicle ignition wire with one of the satellite module 14 ga wires.

Ignition #1 Ignition #2

The satellite relay module has two onboard 30-amp relays. Most vehicles have only one ignition wire necessary to start the vehicle. Some vehicles have two ignition wires. Make all wire connections at the ignition switch wire harness.

1. Use a voltmeter to locate the wire(s) that show +12 volts while the ignition key is in the "ON," "CRANK" and "RUN" positions and 0 volts when the ignition key is in the "OFF" position.
2. Connect the 18 and 14 ga **PINK** wires to the vehicle ignition wire.
3. If the vehicle has a second ignition wire, connect the other 14 ga wire.

Heater/AC #1 — Heater/AC #2

The satellite relay module has one onboard 30-amp relay. Most vehicles have only one heater/AC wire. If an additional heater/AC wire is required to activate the vehicle's heater/AC system, follow the directions under step #5 on the following page. Do not use the **GRAY** wire to power more than one heater/AC wire.

1. Use a voltmeter to find the wire(s) that show +12 volts when the ignition key is in the "ON" position, 0 volts while the starter is cranking and +12 volts while running.
2. Cut this wire in half. Start the vehicle and turn the blower switch on. The blower should not turn on.
3. Connect the **GRAY** wire to the heater/AC wire.
4. If the vehicle has a second heater/AC wire, connect the **PINK/BLACK** wire to the second heater/AC wire.
5. Selectable ignition or heater/AC output #2– the **PINK/BLACK** wire can be programmed to supply an ignition or heater/AC output. The satellite module is factory programmed for ignition #2. To change the **PINK/BLACK** wire from ignition to heater/AC, follow the procedure below.
   - Open the satellite relay module (2 screws).
   - Locate the jumper pin labeled "JP1" to the left of the 5 pin white connector.
   - Remove the jumper terminal from "IGN2" terminal.
   - Insert the jumper terminal to the "ACC2" terminal.

Starter

> **WARNING**: Review the "Safety Bulletin" and diagrams on pages 15-17 prior to installing the starter system.

1. Use a voltmeter to find the wire that shows +12 volts while the ignition key is in the "CRANK" position **only** and 0 volts while the key is in the "OFF," "ON" and "RUN" positions.
2. Cut the wire in half. Test by trying to crank the starter with the ignition key. If it will not crank, you have the correct wire.
3. Connect the **YELLOW** wire to the ignition switch side of the starter wire.
4. Connect the **VIOLET** wire to the starter solenoid side of the starter wire.

Tach Wire (RPM Monitoring)

The AviStart is designed to monitor the vehicle RPM by connecting directly to the vehicle tachometer wire which is usually located at the distributor, ignition coil or diagnostic plug. On most vehicles, the tach wire is easily accessible. If the tach wire is not accessible, there are several alternative choices. Contact Avital Technical Support Department for alternate choices.

The following procedure for testing the vehicle tach wire is not exact and may vary with different vehicle make, model and year. We recommend that you refer to your AviFax documents for tach color code and location information.

1. Set your voltmeter to the AC voltage scale.
2. Start the vehicle. Use the voltmeter to find a wire that will show 1 to 5 volts AC while the vehicle is idle and increase an additional 1 to 5 volts AC when the engine RPM is raised to 3000-4000 RPM.
3. Connect the **WHITE/GREEN** wire to the vehicle tach wire.

Door Lock/Unlock

The system has onboard door lock relays to lock and unlock all of the doors as well as a two-stage unlock. The diagrams on pages 18-21 will illustrate standard lock/unlock and two-stage unlock.

Remote Engine Start Neutral Safety Switch Bulletin

A neutral safety switch is a mechanism on almost every vehicle equipped with an automatic transmission. The neutral safety switch prevents the vehicle from starting while the gear shift selector is in "Reverse" or "Forward" gear positions.

There are basically two types of neutral safety switches. The most common is the mechanical (separate) neutral safety switch. A small group of vehicles use a combined neutral safety switch.

Type "A" (separate)

The mechanical neutral safety switch is located between the ignition switch and the starter solenoid. The starter wire runs directly from the back of the ignition switch to the neutral safety switch and then to the starter solenoid. When adding a remote engine starter, make starter wire connections as close to the ignition switch as possible to ensure your connections are between the ignition switch and the neutral safety switch.

Type "B" (combined)

Some vehicles combine the neutral safety switch and the steering column shift mechanism together. The starter wires run from the "combined" switch directly to the starter solenoid. The remote start wire connection cannot be made between the ignition switch and the neutral safety switch. As a result, if the vehicle was left in gear with the key in the ignition and not in the locked position, the vehicle could move forward or backward if a remote start attempt was made.

The combined type neutral safety switch requires an additional relay to prevent the vehicle from remote starting while the key is in the ignition. Use the attached test procedure and relay wiring diagrams. Install the complete remote start unit and test all safety features before conducting the test procedure.

Currently, the only vehicles with the combined neutral safety switch that Avital is aware of are General Motors trucks, GM sport utility vehicles, GM column shift passenger cars and Dodge Dakota pickup trucks. There may be additional vehicles with the combined neutral safety switch that require the additional relay.

NOTE: Use the following test procedure upon completion of every remote start regardless of the make and model of the vehicle

Test Procedure

> ⚠ **CAUTION**: Be sure there is at least 5 feet of unobstructed clearance at the front and rear of the vehicle. Make sure to alert anyone near the vehicle you are testing that the vehicle may move forward slightly.

1. Apply the parking brake.
2. Turn the ignition key to the "ON" position and place the vehicle in "DRIVE."
3. Turn the ignition as close to the "OFF" position as possible. (Most vehicles will not allow the key to turn off completely.)
4. Place your foot over the brake pedal without touching it. Be prepared to step on the brake if the starter engages.
5. Activate the remote engine starter.
6. If the vehicle starter engages, immediately press the brake pedal to disengage (shut down) the remote start. You have a "combined" type neutral safety switch and you will have to add an additional relay as shown in the diagram.
7. If the vehicle starter does not engage, no additional relays are required.

All vehicles have a "key in the ignition" reminder circuit (key minder) that will sound a chime or buzzer while the key is in the ignition and the driver's door is open. The following diagrams will illustrate how to interface the key-minder wires and a relay to prevent the vehicle from remote starting while the key is in the ignition.

The wire color codes are subject to change. Check all wires with a volt/ohmmeter. If you have any questions, please contact the Technical Support Department at 1-800-444-4667.

General Motors Sport Utility Vehicles, Trucks and Column Shift Passenger Vehicles

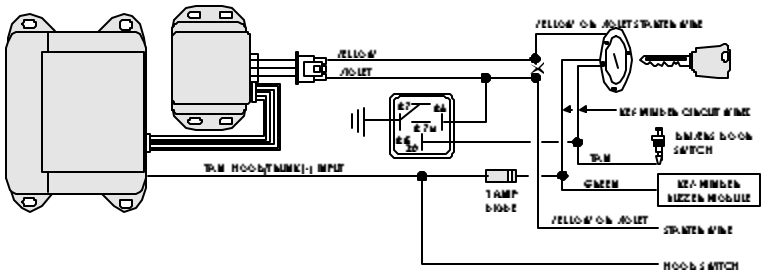

Dodge Dakota Pickup Trucks

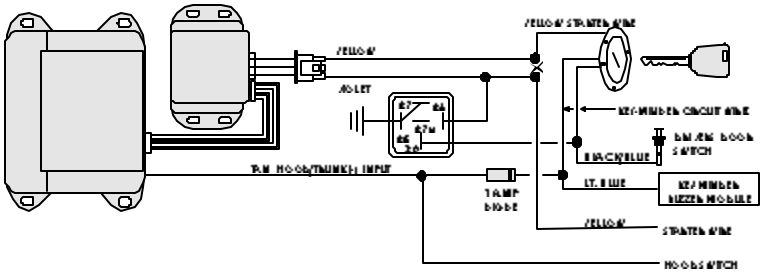

Positive Trigger Door Locks
Two-Stage Door Unlock

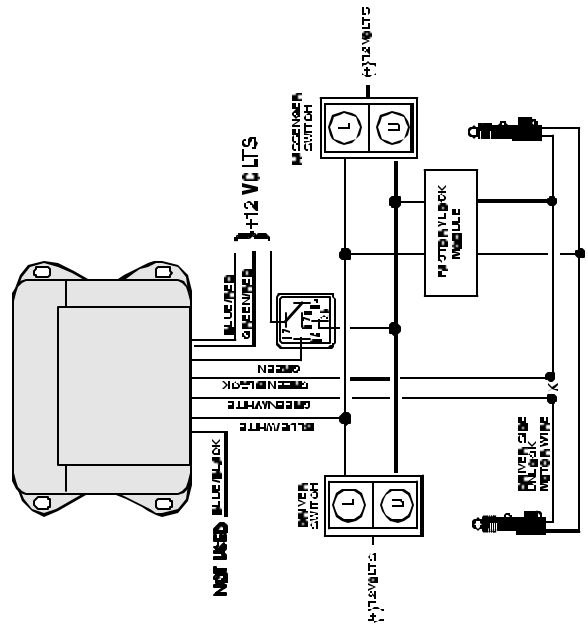

Positive Trigger Door Locks

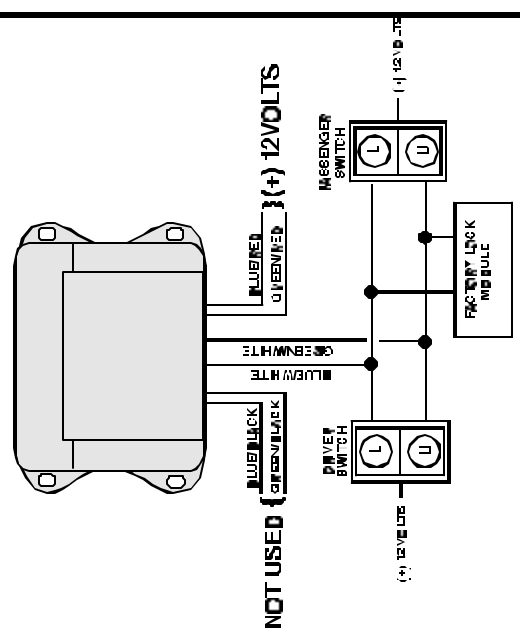

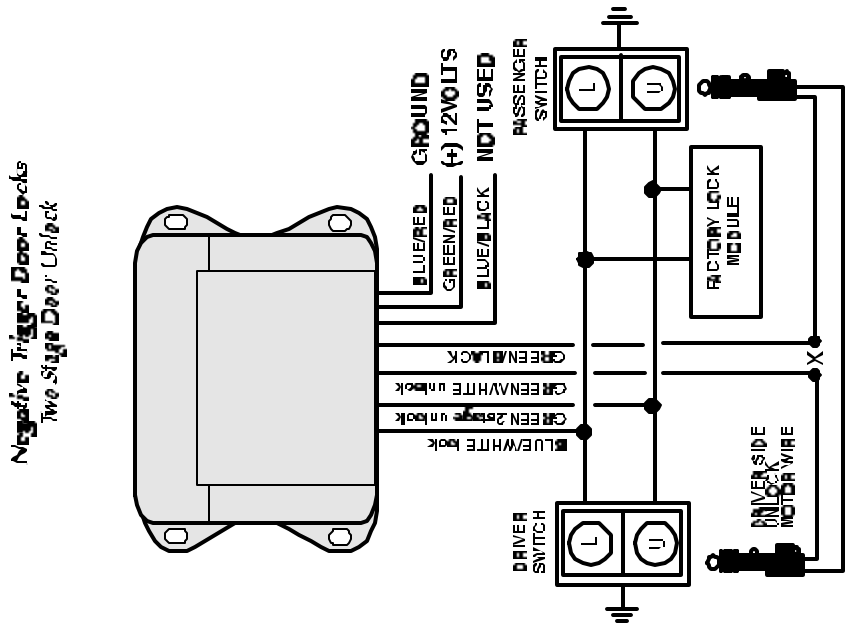
Negative Trigger Door Locks
Two Stage Door Unlock
GROUND
(+) 12VOLTS
NOT USED
BLUE/RED
GREEN/RED
BLUE/BLACK
GREEN/BLACK
GREEN/WHITE unlock
GREEN 2stage unlock
BLUE/WHITE lock
PASSENGER SWITCH
FACTORY LOCK MODULE
DRIVER SWITCH
DRIVERSIDE LOCK MOTOR WIRE

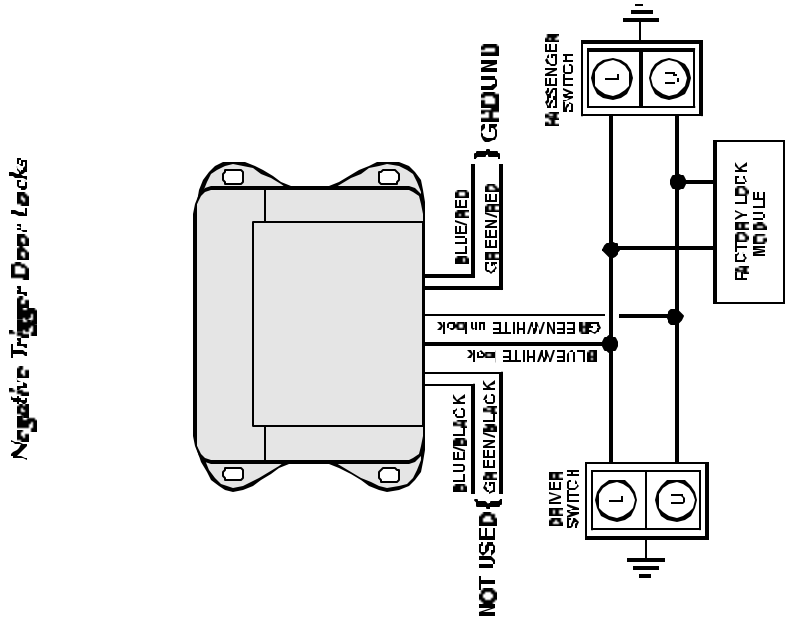
Negative Trigger Door Locks
GROUND
BLUE/RED
GREEN/RED
GREEN/WHITE unlock
BLUE/WHITE lock
BLUE/BLACK
GREEN/BLACK
NOT USED
PASSENGER SWITCH
FACTORY LOCK MODULE
DRIVER SWITCH

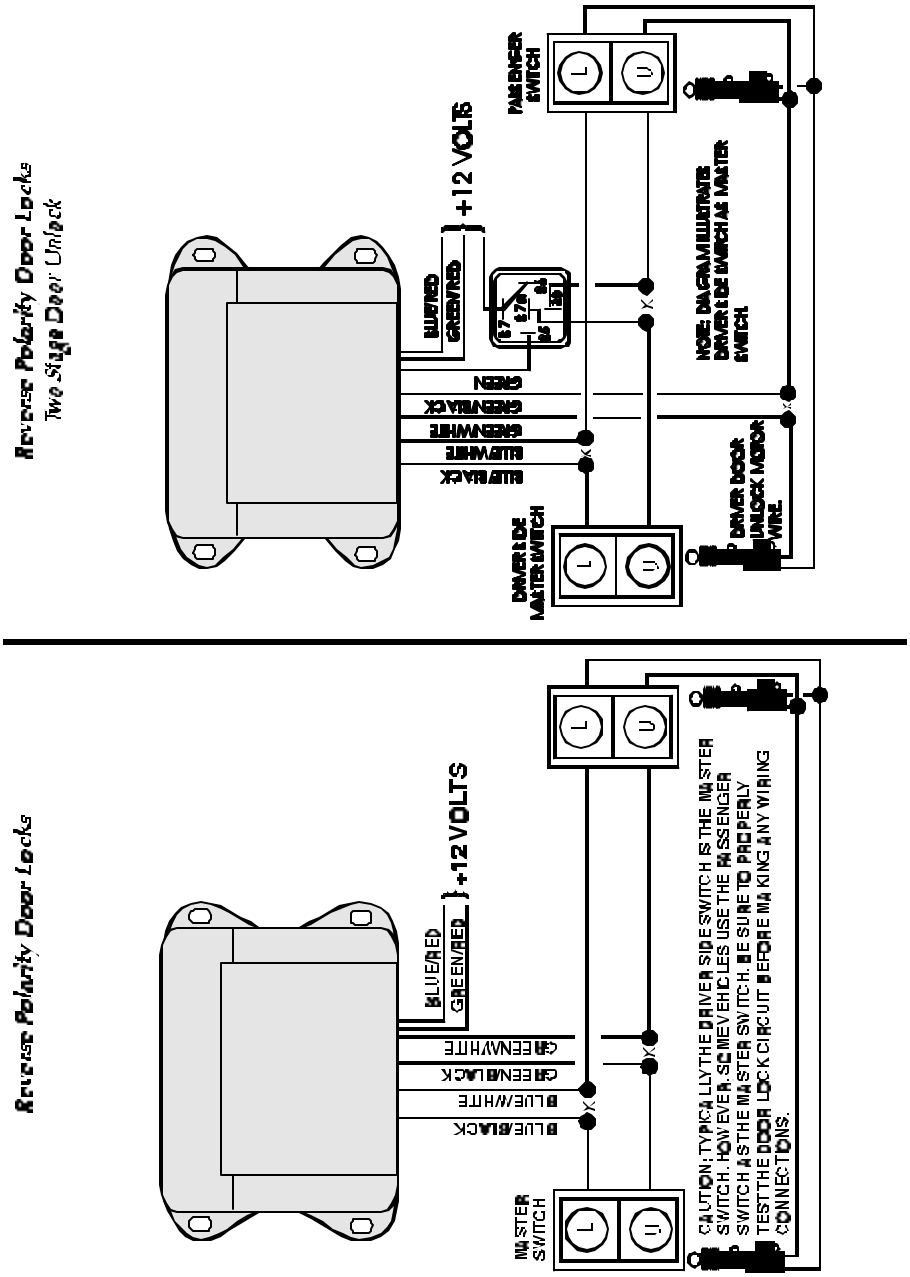
Reverse Polarity Door Locks
Two Stage Door Unlock
+12 VOLTS
BLUE/RED
GREEN/RED
GREEN
GREEN/BLACK
GREEN/WHITE
BLUE/BLACK
BLUE/WHITE
PASSENGER SWITCH
NOTE: DIAGRAM ILLUSTRATES DRIVER BE SWITCH AS MASTER SWITCH.
DRIVER DOOR UNLOCK MOTOR WIRE
DRIVER DR MASTER SWITCH
Reverse Polarity Door Locks
+12 VOLTS
BLUE/RED
GREEN/RED
GREEN/WHITE
GREEN/BLACK
BLUE/WHITE
BLUE/BLACK
MASTER SWITCH
CAUTION: TYPICALLY THE DRIVER SIDE SWITCH IS THE MASTER SWITCH. HOWEVER, SOME VEHICLES USE THE PASSENGER SWITCH AS THE MASTER SWITCH. BE SURE TO PROPERLY TEST THE DOOR LOCK CIRCUIT BEFORE MAKING ANY WIRING CONNECTIONS.

One Wire Lock/Unlock Mercedes/Audi

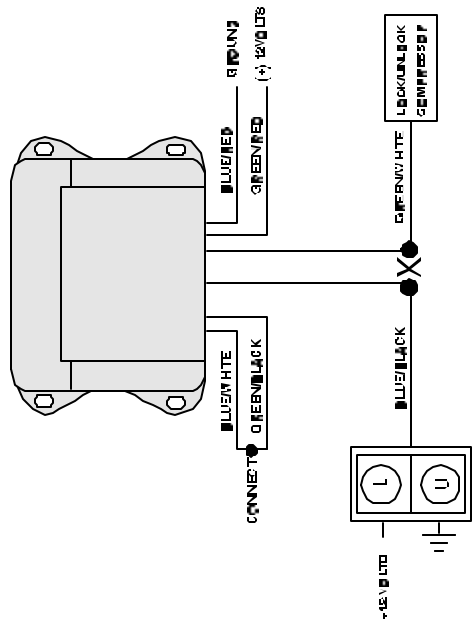

Adding Door Lock Actuators

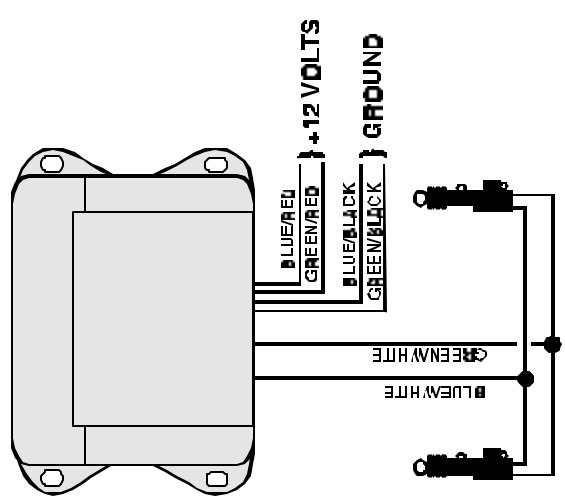

Hood Switch (Mandatory)

As a safety precaution, the hood switch prevents the vehicle from starting when the hood is open. If the vehicle is in the remote start mode and the hood is opened, the remote start will immediately shut down. The hood switch will also trigger the alarm when opened.

1. Choose a location under the hood away from direct exposure to water or water drain areas.
2. Check for proper hood clearance.
3. Make sure the hood switch will make contact with a flat surface on the hood when closed.
4. Drill a $^{5}/_{16}$" mounting hole.
5. Mount the hood switch.
6. Connect the **TAN** wire to the hood switch.
7. Make sure the hood makes contact with hood switch when closed and presses the hood switch straight down to prevent wear.

Siren

1. Choose a location in the engine compartment away from high heat engine components, moving parts and direct exposure to water.
2. Make sure the siren and siren wires cannot be seen or reached from below the vehicle.
3. Mount the siren with the two self tapping screws to a solid metal surface.
4. Connect the siren **BLACK** wire to the alarm module **VIOLET** wire.
5. Connect the siren **RED** wire to the alarm module **RED** wire.

Power and Ground Connections

> ⚠ **CAUTION**: Do not plug in the system fuses until the final step below.

1. Connect the 18 ga **RED** wire to one end of a supplied 20 amp fuse assembly.
2. If the vehicle parking lights are positive trigger, connect the **RED/WHITE** wire to one end of the other supplied 20 amp fuse assembly.

Continued on next pge.

3. Connect the **BLACK** wire to the 10 mm ring terminal.
4. Connect the 10 ga **RED** wire to one end of both 30-amp fuse assemblies.
5. Connect the other ends of the 18 ga **RED** and **RED/WHITE** wire fuse assemblies to the 10 mm ring terminal.
6. Connect the other end of the 10 ga **RED** wire fuse assembly to the other 10 mm ring terminal.
7. Remove the (+) and (-) battery bolts. Do not disconnect the battery clamps.
8. Connect the empty fuse assemblies to the (+) battery terminal.
9. Connect the **BLACK** wire to the (-) battery terminal.
10. Inspect all wiring. Make sure all wires are connected correctly.
11. Install the 5 amp fuse in the 18 ga **RED** wire fuse assembly.
12. Install the 20 amp fuse in the **RED/WHITE** wire fuse assembly.
13. Install the two 20 amp fuses in the 10 ga **RED** wire fuse assemblies.

Mandatory RPM Programming

In order to remote start the vehicle engine and prevent over-grinding of the starter motor, the engine RPM must be programmed into the system memory.

1. Start the engine with the ignition key. Let the engine warm up until it reaches a normal idle RPM (typically 700-900 RPM).
2. Turn the ignition key "OFF."
3. Start the engine with the ignition key.
4. Within 10 seconds of starting the vehicle, begin flicking the valet switch on then off 18 times (counting the siren chirps).

   NOTE: Stop on the 18th chirp. See the "Programming Table for System Features" on page 25.
5. Press and hold the remote START button.
6. The parking lights will flash two times to confirm the RPMs have been memorized.
7. Release the START button.
8. Turn the engine off.

Programmable Features

All AviStart system and remote control programmable features are accomplished by turning the ignition key to the "ON" position or starting the engine and flicking the valet switch on and off a preset number of times. The siren will chirp for audible programming confirmation.

The AviStart also allows the user to add new remote controls in one step, delete lost or stolen remote controls or rearrange the factory preset remote control functions.

1. Remove the system from Protected Valet Mode. Programming cannot be accessed while the system is in Protected Valet Mode indicated by the LED on solid red.
2. Select the feature you wish to program from the "Programming Table for System Features" or the "Programming Table for Remote Controls" on pages 25-26.Note the number of chirps associated with that feature.
3. Turn the ignition key to the "ON" position.
4. Within 10 seconds, begin flicking the valet switch on and off. The siren will chirp once each time you flick the switch on then off.
5. Continue flicking the switch on and off, counting the number of chirps.

   NOTE: Stop when you reach the number of chirps associated with your chosen feature.
6. Follow the "Secondary Action." You will hear a number of chirps to confirm that you have changed the setting of that feature.
7. Turn the ignition key "OFF."
8. Repeat steps 1-7 for any other feature you wish to program.

Programming Table for System Features

Feature	Factory Setting	No. of Chirps	Secondary Action
Active/Passive Arming	Passive	4	Wait 3 seconds, the siren will chirp once for active, twice for passive.
Passive Door Lock	OFF	5	Wait 3 seconds, the siren will chirp once for OFF, twice for ON.
Passive Arming Chirp/Light Flash Confirmation	ON	6	Wait 3 seconds, the siren will chirp once for OFF, twice for ON.
Remote Arming Siren Chirps	ON	7	Wait 3 seconds, the siren will chirp once for OFF, twice for ON.
Siren Duration, 30-60 Seconds	30	8	Wait 3 seconds, the siren will chirp once for 60, twice for 30.
2 Pulse lock	1 Pulse	9	Wait 3 seconds, the siren will chirp once for 2 pulse, twice for 1pulse.
2 Pulse Unlock	1 Pulse	10	Wait 3 seconds, the siren will chirp once for 2 pulse, twice for 1pulse.
Door Lock/Unlock Output Duration (1-3 sec.)	1 Seconds	11	Wait 3 seconds, the siren will chirp once for 3 seconds, twice for 1 seconds.
Ignition Control Lock/Unlock	ON	12	Wait 3 seconds, the siren will chirp once for OFF, twice for ON.
Programable 0 or 3 Second Delay for Ignition-Controlled Lock	0 Second	13	Wait 3 seconds, the siren will chirp once for 3 seconds,twice for 0 second.
RPM Door Lock	OFF	14	Wait 3 seconds, the siren will chirp once for OFF, twice for ON.
Door Trigger By-pass When Remote Engine Start	OFF	15	Wait 3 seconds, the siren will chirp once for OFF, twice for ON.
Warn-away 3 Times Trigger or Only Chirps	3 Times Trigger	16	Wait 3 seconds, the siren will chirp once for Only Chirps,Twice for 3 Times Trigger.
Door Ajar Indication	ON	17	Wait 3 seconds, the siren will chirp once for OFF, twice for ON.
Mandatory RPM Programming		18	See "Mandatory RPM Programming" on page 23.
Remote Star Run Time, 20 or 30 Minutes	20 Minutes	19	Wait 3 seconds, the siren will chirp once for 30, twice for 20 Minutes.
Remote Start Pre-Ignition, 2 or 15 Seconds	2 Seconds	20	Wait 3 seconds, the siren will chirp once for 15 Seconds, twice for 2Seconds.
Temperature-Controlled Starting, OFF or 5°F (-15°C)	OFF	21	Wait 3 seconds, the siren will chirp once for OFF, twice for 5°F (-15°C).
-7°F (-20°C) or -22°F (-30°C)		22	Wait 3 seconds, the siren will chirp once for -7°F (-20°C), twice for -22° (-30°C).
Security Start Lock	ON	23	Wait 3 seconds, the siren will chirp once for OFF, twice for ON.

Programming Table for Remote Controls

Feature	Factory Setting	No. of Chirps	Secondary Action
Arm/Disarm	Button	24	Press Button, the siren will chirp 1 time.
Remote Controlled Trunk Release Output	Button	25	Press Button, the siren will chirp 2 times.
Remote Start	Button	26	Press Button, the siren will chirp 3 times.
Silent Arm/Disarm	Button	27	Press Button, the siren will chirp 4 times
Remote Controlled Valet	+ Buttons	28	Press + Buttons, the siren will chirp 5 times.
Channel 6 Remote Controlled Accessory Output	+ Buttons	29	Press + Buttons, the siren will chirp 6 times.
Remote Controlled Sensor Bypass	+ Buttons	30	Press + Buttons, the siren will chirp 7 times.
Temperature Controlled Start Active/Inactive	+ Buttons	31	Press + Buttons, the siren will chirp 8 times.
Channel 9 Remote Controlled Accessory Output	+ Buttons	32	Press + Buttons, the siren will chirp 9 times.
One Step Remote Code Learning	Button	33	Press Button, the siren will chirp 1 time.
Instant Remote Control Code Deletion		34	Wait 3 seconds, the siren will chirp twice, all codes are erased out of memory.

© 1999 Avital Technologies, Inc., A Division of Clifford Electronics
Part Number: 32-6501/AviStart6501IM/0999