VIPER®

Responder LE Model 5701

Security and Remote Start

Owner's Guide

Directed® ELECTRONICS

© 2008 Directed Electronics, Vista, CA

Limited lifetime consumer warranty

Directed Electronics. ("Directed") promises to the original purchaser to repair or replace (at Directed's election) with a comparable reconditioned model any Directed unit (hereafter the "unit"), excluding without limitation the siren, the remote transmitters, the associated sensors and accessories, which proves to be defective in workmanship or material under reasonable use during the lifetime of the vehicle provided the following conditions are met: the unit was purchased from an authorized Directed dealer, the unit was professionally installed and serviced by an authorized Directed dealer; the unit will be professionally reinstalled in the vehicle in which it was originally installed by an authorized Directed dealer; and the unit is returned to Directed, shipping prepaid with a legible copy of the bill of sale or other dated proof of purchase bearing the following information: consumer's name, telephone number and address; the authorized dealers name, telephone number and address; complete product description, including accessories; the year, make and model of the vehicle; vehicle license number and vehicle identification number. All components other than the unit, including without limitation the siren, the remote transmitters and the associated sensors and accessories, carry a one-year warranty from the date of purchase of the same. ALL PRODUCTS RECEIVED BY DIRECTED FOR WARRANTY REPAIR WITHOUT PROOF OF PURCHASE WILL BE DENIED. This warranty is non-transferable and is automatically void if: the original purchaser has not completed the warranty card and mailed it within ten (10) days from the date of purchase to the address listed on the card; the unit's date code or serial number is defaced, missing or altered; the unit has been modified or used in a manner contrary to its intended purpose; the unit has been damaged by accident, unreasonable use, neglect, improper service, installation or other causes not arising out of defects in materials or construction. The warranty does not cover damage to the unit caused by installation or removal of the unit. Directed, in its sole discretion, will determine what constitutes excessive damage and may refuse the return of any unit with excessive damage.

TO THE MAXIMUM EXTENT ALLOWED BY LAW, ALL WARRANTIES, INCLUDING BUT NOT LIMITED TO EXPRESS WARRANTY, IMPLIED WARRANTY, WARRANTY OF MERCHANTABILITY, FITNESS FOR PARTICULAR PURPOSE AND WARRANTY OF NON-INFRINGEMENT OF INTELLECTUAL PROPERTY, ARE EXPRESSLY EXCLUDED; AND DIRECTED NEITHER ASSUMES NOR AUTHORIZES ANY PERSON OR ENTITY TO ASSUME FOR IT ANY DUTY, OBLIGATION OR LIABILITY IN CONNECTION WITH ITS PRODUCTS. DIRECTED DISCLAIMS AND HAS ABSOLUTELY NO LIABILITY FOR ANY AND ALL ACTS OF THIRD PARTIES INCLUDING ITS AUTHORIZED DEALERS OR INSTALLERS. DIRECTED SECURITY SYSTEMS, INCLUDING THIS UNIT, ARE DETERRENTS AGAINST POSSIBLE THEFT. DIRECTED IS NOT OFFERING A GUARANTEE OR INSURANCE AGAINST VANDALISM, DAMAGE OR THEFT OF THE AUTOMOBILE, ITS PARTS OR CONTENTS; AND HEREBY EXPRESSLY DISCLAIMS ANY LIABILITY WHATSOEVER, INCLUDING WITHOUT LIMITATION, LIABILITY FOR THEFT, DAMAGE AND/OR VANDALISM. THIS WARRANTY DOES NOT COVER LABOR COSTS FOR MAINTENANCE, REMOVAL OR REINSTALLATION OF THE UNIT OR ANY CONSEQUENTIAL DAMAGES OF ANY KIND. IN THE EVENT OF A CLAIM OR A DISPUTE INVOLVING DIRECTED OR ITS SUBSIDIARY, THE

© 2008 Directed Electronics—all rights reserved

VENUE SHALL BE SAN DIEGO COUNTY IN THE STATE OF CALIFORNIA. CALIFORNIA STATE LAWS AND APPLICABLE FEDERAL LAWS SHALL APPLY AND GOVERN THE DISPUTE. THE MAXIMUM RECOVERY UNDER ANY CLAIM AGAINST DIRECTED SHALL BE STRICTLY LIMITED TO THE AUTHORIZED DIRECTED DEALER'S PURCHASE PRICE OF THE UNIT. DIRECTED SHALL NOT BE RESPONSIBLE FOR ANY DAMAGES WHATSOEVER, INCLUDING BUT NOT LIMITED TO, ANY CONSEQUENTIAL DAMAGES, INCIDENTAL DAMAGES, DAMAGE TO VEHICLE, DAMAGES FOR THE LOSS OF TIME, LOSS OF EARNINGS, COMMERCIAL LOSS, LOSS OF ECONOMIC OPPORTUNITY AND THE LIKE. NOTWITHSTANDING THE ABOVE, THE MANUFACTURER DOES OFFER A LIMITED WARRANTY TO REPLACE OR REPAIR THE CONTROL MODULE SUBJECT TO THE CONDITIONS AS DESCRIBED HEREIN. THIS WARRANTY IS VOID IF THE UNIT HAS NOT BEEN PURCHASED FROM DIRECTED, OR AN AUTHORIZED DIRECTED DEALER, OR IF THE UNIT HAS BEEN DAMAGED BY ACCIDENT, UNREASONABLE USE, NEGLIGENCE, ACTS OF GOD, NEGLECT, IMPROPER SERVICE, OR OTHER CAUSES NOT ARISING OUT OF DEFECT IN MATERIALS OR CONSTRUCTION.

Some states do not allow limitations on how long an implied warranty will last or the exclusion or limitation of incidental or consequential damages. This warranty gives you specific legal rights and you may also have other rights that vary from State to State.
This warranty is only valid for sale of product(s) within the United States of America. Product(s) sold outside of the United States of America are sold "AS-IS" and shall have NO WARRANTY, express or implied.
This product may be covered by a Guaranteed Protection Plan ("GPP"). See your authorized Directed dealer for details of the plan or call Directed Customer Service at 1-800-876-0800.
Make sure you have all of the following information from your authorized Directed dealer:

A clear copy of the sales receipt, showing the following:

- Date of purchase
- Your full name and address
- Authorized dealer's company name and address
- Type of alarm installed
- Year, make, model and color of the automobile
- Automobile license number
- Vehicle identification number
- All security options installed on automobile
- Installation receipts

920-0003 06-06

© 2008 Directed Electronics—all rights reserved

Table of contents

Limited lifetime consumer warranty iii
What is included 1
Important information 1
Your warranty 2
FCC/ID Notice 2
Replacement remotes 2
Caution. 2
Responder LE 2-Way 3
Responder LE 1-way 4
Transmitter configuration 5
System maintenance 10
Low battery indicator 10
Battery Replacement. 10
Remote control programming 11
Multi-car control capability 13
Adjusting the onboard shock sensor 13
What's New 16
Using the system 19
Warning! Safety first. 19
Arming the system 21
While the system is armed. 22
Modified Arming Modes 24
Disarming the System 25
System override 26
Using the remote start 27
Before using your Remote Start 27

© 2008 Directed Electronics—all rights reserved

Remote starting your vehicle 27
Points to remember 28
Runtime Check 28
Manual transmission 29
Timer mode 30
Turbo timer mode 30
Cabin temperature 31
Safety features 33
Starter anti-grind circuitry 33
Disabling the remote start system 33
Diagnostics 34
Arming 34
Disarming 35
System status chirps 35
Table of zones 36
Interpreting zone diagnostics 36
Nuisance prevention® circuitry 37
Owner recognition 38
Rapid resume logic 38
Power saver mode 38
System 38
2-way remote 39
Programming options 40
Security & convenience expansions 42
Glossary of Terms 44
Quick Reference Guide 47

© 2008 Directed Electronics—all rights reserved

What is included

- The control module with Stinger™ DoubleGuard® two-stage shock sensor
- Control center (installed out of sight on your vehicle) with integrated status LED and Valet override switch
- One five-button/2-way Supercode Responder LE Remote Control
- One five-button/ 1-way Supercode remote
- Revenger™ Soft Chirp™ six-tone siren
- A shut-down toggle switch
- Window decals
- Your warranty registration

Important information

Congratulations on the purchase of your state-of-the-art remote start and alarm system. Due to the complexity of this system, it must be installed by an authorized dealer only. Installation of this product by anyone other than an authorized dealer voids the warranty. All dealers are provided with a preprinted dealer certificate to verify authorization.

By carefully reading this Owner's Guide prior to using your system, you will maximize the use of this system and its features. You can print additional or replacement copies of this manual by accessing our web site at www.directed.com.

© 2008 Directed Electronics—all rights reserved

Your warranty

Your warranty registration must be completely filled out and returned within 10 days of purchase. Your product warranty will not be validated if your warranty registration is not returned. Make sure you receive the warranty registration from your dealer. It is also necessary to keep your proof of purchase, which reflects that the product was installed by an authorized dealer.

FCC/ID Notice

This device complies with Part 15 of FCC rules. Operation is subject to the following two conditions: (1) This device may not cause harmful interference, and (2) This device must accept any interference received, including interference that may cause undesirable operation.

Changes or modifications not expressly approved by the party responsible for compliance could void the user's authority to operate this device.

Replacement remotes

Your system comes with one Responder LE remote control (P/N 7251V) and one companion remote control (P/N 7152V). If additional remotes are desired, please see your authorized dealer or visit www.directedstore.com to order.

Caution

This product is designed for fuel injected vehicles only. Use of this product in a standard transmission vehicle must be in strict accordance with this guide.

© 2008 Directed Electronics—all rights reserved

Responder LE 2-Way

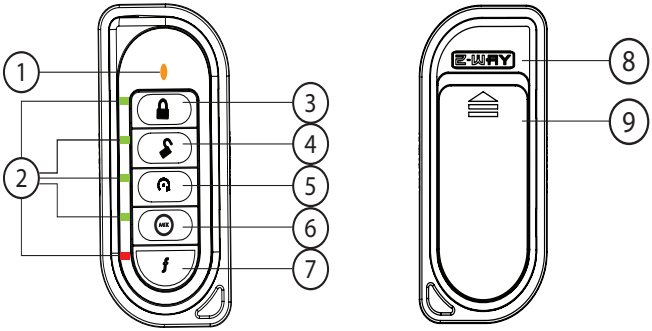

Feature	Description	
1	Transmit indicator	
2	LED indicators	Blinks indicate function confirmation
3	Lock button	Press for one second to arm.
4	Unlock button	Press for one second to disarm.
5	Remote start button	Press for one second to activate remote start.
6	Auxiliary button	Press and hold for 1.5 second to activate optional trunk release.
7	Function button	Allows access to programming and modifies operation of the other buttons.
8	2 WAY Label	Back of remote has label to identify the remote as 2-way or 1-way.
9	Battery Door	Remove to access batteries when necessary. For more details, see p.10

© 2008 Directed Electronics—all rights reserved

Responder LE 1-way

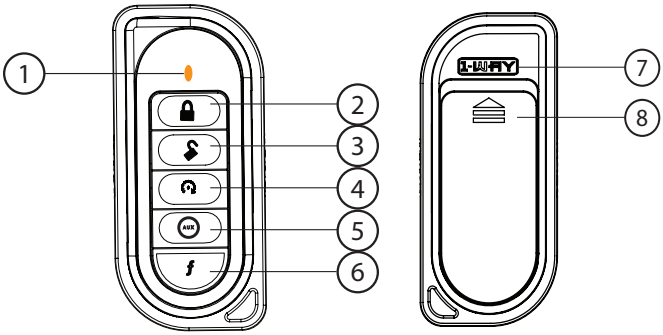

Feature	Description	
1	Transmit indicator	
2	Lock button	Press for one second to arm.
3	Unlock button	Press for one second to disarm.
4	Remote start button	Press for one second to activate remote start.
5	Auxiliary button	Press and hold for 1.5 second to activate trunk release.
6	Function button	Allows access to programming and modifies operation of the other buttons.
7	1 WAY Label	Back of remote has label to identify the remote as 2-way or 1-way
8	Battery Door	Remove to access batteries when necessary. For more details, see p.10

© 2008 Directed Electronics—all rights reserved

Transmitter configuration

REMOTE CONTROL FUNCTIONS TABLE

Button \ Level	f x 0	f x 1	f x 2	f x 3	f x 4
LOCK	ARM	SILENT ARM	SENSOR BYPASS	ARMED (SILENT SENSOR)	ARMED (SILENT TRIGGER)
UNLOCK	DISARM	SILENT DISARM	VALET MODE	CAR FINDER	—
REMOTE START	REMOTE START	RUNTIME RESET	TIMER MODE	SMART START	REAR DEFOGGER
AUX	TRUNK RELEASE	AUX 1	AUX 2	AUX 3	—
FUNCTION	FUNCTION SHIFT	CABIN TEMPERATURE REQUEST (2-way Only)	ARM STATUS (2-way Only)	RUNTIME CHECK (2-way Only)	LAST TRIGGER REQUEST (2-way Only)

Note: f button must be pressed and finally **held** to access state.

Button	Command	Confirmation Feedback (2-way remote only)	Notes
Arm	**Press** one time to Arm	Lock LED blink for one second with 1 Beep and siren tone	Press/hold for 1.5 seconds to Arm the system and then activate the Panic output
Disarm	**Press** one time to Disarm	Unlock LED blink for one second with 2 Beeps	
Remote Start	**Press** one time to activate Remote Start	Remote start LED blinks for 3 seconds, Remote Start tones.	
AUX	Press and hold for 1.5 seconds to activate the Trunk Release.	The AUX LED comes on for 3 seconds, and AUX activation tone sounds.	This is an optional feature. See your sales rep/installer for details.
Function Shift	**Press** 1 to 4 times. (See Function shift table.)	LED indicators turn on (according to the feature command.)	Each Press then release, shifts the function of the command button.

Pressing more than one button simultaneously generates an Error tone and the F-Shift LED turns ON.

© 2008 Directed Electronics—all rights reserved

Feature	Command	Confirmation Feedback	Notes
Silent Arm	**Press** f one- time and then press 🔒.	Arm/Lock LED on, no audio	Arms the system without chirps
Silent Disarm	**Press** f one- time and then press 🔓 .	Disarm/Lock LED on, no audio	Disarms the system without chirps
Runtime reset	**Press** f one-time and then ⏱ .	Remote start ON tones.	Re-starts the remote start runtime counter if remote start is active. **Note:** If remote start is not active, the 2-WAY remote will respond with error tone.
Aux 1	Press f one time and then press AUX.	The AUX LED comes on for 3 seconds, and AUX activation tone sounds.	This is an optional feature. See your sales rep/in-staller for details.
Cabin temperature	**Press** f one time, then **Hold** for 1.5 seconds.	Multiple LEDs blink, and 1 beep	Cabin temperature is displayed on the remote. LED lights up to indicate a range. (See page 30.)
Sensor Bypass	**Press** f two-times and then 🔒.	Arm/Lock LED on, 1 beep	Available when armed only: bypasses warn triggers. Send again to bypass Warn & Full Trigger; Send again to turn bypass off and monitor sensors normally. For more informa-tion, see Modified Arming Modes on page 24

© 2008 Directed Electronics—all rights reserved

Feature	Command	Confirmation Feedback	Notes
Valet Mode	**Press** f two-times and then S .	UnLock LED on and beeps 1 or 2 times	To enter or exit Valet mode, even if Armed. When entering Valet Mode the unlock LED blinks, and the remote beeps one time. When exiting Valet Mode the unlock LED blinks and the remote beeps two-times.
Timer mode	**Press** f two-times and then .	Remote start LED on.	Enables or disables the remote start timer mode.
Aux 2	Press f two times and then press AUX.	The AUX LED comes on for 3 seconds, and AUX activation tone sounds.	This is an optional feature. See your sales rep/in-staller for details.
Armed status	**Press** f two-times and then **Hold** for 1.5 seconds.	If system is Armed: Lock LED blink for one second with 1 Beep If system is Disarmed: Unlock LED blink for one second with 2 beeps	Replays last Arm /Disarm status message received.

© 2008 Directed Electronics—all rights reserved

Feature	Command	Confirmation Feedback	Notes
Armed (Silent Sensor mode)	**Press** f three-times and then 🔒.	LED on, 1 beep & 3 error tone	Arms the system; sensor Full Trigger will ONLY page the remote and **will not** activate the siren/lights. Wired inputs will page and activate the siren/lights.
Car Finder	**Press** f three-times and then .	On Remote Control: Unlock LED on with 1 short beep On Vehicle: 1 long siren chirp and parking lights flash 10 times.	Arm/Disarm cancels the light flashes.
Smart Start	**Press** f three-times and then press .	Remote Start LED on, with 1 (for enable) or 2 (For disable) beeps	Enables or disables the Smart-Start feature.
Aux 3	Press f three times and then press AUX.	The AUX LED comes on for 3 seconds, and AUX activation tone sounds.	This is an optional feature. See your sales rep/installer for details
Runtime check	**Press** f three-times, and then **Hold** for 1.5 seconds.	Remote Start ON tones.	Runtime remaining is displayed on the remote. (See page 28).

© 2008 Directed Electronics—all rights reserved

Feature	Command	Confirmation Feedback	Notes
Armed (Silent Trigger mode)	**Press** *f* four-times and then 🔒.	Lock LED on, 1 beep & 4 error tone	Arms the system; sensor and hardwire Full Triggers will ONLY page the remote and will not activate the siren/lights. For more details see Silent Mode 2 section on page 25.
Rear Defogger	**Press** *f* four times, and then . (Only after remote start is on.)	Remote start LED ON, 1 beep.	Automatically turns on during remote start.
Last Trigger	**Press** *f* four-times and then hold for 1.5 seconds.	Replays the last trigger message received.	Trigger refers to the remote tones and LED pattern generated by the last alarm trigger event.

Out of Range Notification

If a command is issued from the remote, but the remote is beyond the range of the vehicle to receive the command, the remote will respond with an Out of Range notification. If this occurs, the remote will Blink rapidly the transmit indicator, turn on the F indicator and play the error tone.

Since conditions will vary in different areas (ie: Weather, RF interference, etc) range may be affected and require you to be closer to the vehicle for successful transmission.

© 2008 Directed Electronics—all rights reserved

System maintenance

The system requires no specific maintenance. Your remotes are powered by small coin cell lightweight 3-volt lithium batteries that will last approximately one year under normal use. The 2-way remote uses two CR2016 cell batteries and the 1-way remote uses one CR2032 cell battery. When the battery begins to weaken, the operating range will be reduced.

Low battery indicator

When the batteries are low on the 2-way remote it will emit two groups of beeps, the *f* LED will flash, and the alarm will emit an additional chirp to let you know its time to change the battery. When the battery is low on the 1-way remote, the remote responds the same, but without the LED flash.

Note: The Arm/Disarm chirps should be programmed ON for the alarm to emit any additional chirps during disarm. Ask your authorized dealer if you have any questions.

Battery Replacement

Slide the door up to expose the battery beneath the holder. Remove the expired battery. Place the new battery into the remote control. When power is returned the remote control is ready for use.

© 2008 Directed Electronics—all rights reserved

Remote control programming

The Responder LE 2 way remote control has menus for programming the remote to the system control module including adjusting the control module onboard shock sensor, and for configuring the remote control user features.

To program the remote user features:

1. Press and hold the f button for 12 seconds: (at 3 seconds ignore the Car number indicator.)
2. The remote emits one long beep, and the Transmit LED turns on. This indicates the Main menu.
3. Press and hold the button for 1.5 seconds:
   The remote beeps two-times, and the Transmit LED blinks two-times and stays on. You are now in the Remote Configuration menu.
   The Arm, Disarm, Remote Start & Aux LEDs will turn ON, and/or blink to indicate the current remote feature configuration. When the LED is ON, the feature is ON.

To configure the remote control features press and release the command button. The LED next to the button will turn On then OFF. The remote beeps to indicate the feature configuration.

Button: Auto-Button Lock.
When Arm LED is OFF, buttons will not lock.

LED ON: The buttons automatically lock 60 seconds after the last button operation to avoid accidental Command operations. When locked, if any command button is pressed the remote will emit an error output.

If button lock is ON, press f, and then buttons.

© 2008 Directed Electronics—all rights reserved

button: Remote Beeps

- Disarm LED **OFF**: The remote will not emit beeps except when programming.
- Disarm LED ON: The remote will emit beeps normally.
- Disarm LED blinking: The remote will emit beeps only for alarm trigger messages from the alarm system.

button: Runtime Low Alert feature
Note: This feature is not available on the 1-way remote.

- Remote Start LED OFF: The remote will ignore Runtime Low Alert messages.
- Remote Start LED ON: The remote will emit feedback output for Runtime Low Alert messages.

These messages will be automatically sent while Remote Start is ON to alert you when the runtime remaining is at 3 minutes, and again at 1 minute before shut down.
Note: This feature is not available on the 1-way remote

AUX button: Page mode/Power saver
Note: This feature is not available on the 1-way remote.

- Aux LED OFF: The remote will not wake up and listen for messages from the system to extend battery life. **Note:** This means the remote will not receive alarm trigger pages.
- Aux LED ON: the remote will wake up to listen for messages from the system
- Aux LED blinking: Power saver mode (see note below)

  Note: Power saver automatically turns off the remote pager if a button on the remote has not been pressed for more than 72 hours and will be restored after any button on the remote is pressed.

© 2008 Directed Electronics—all rights reserved

Multi-car control capability

You can operate the Responder LE 2-way remote control system for two cars, with full command capability for both vehicles.

While holding a command button and transmitting, the Amber LED at the top of the remote control will blink in groups to indicate which Car is being controlled.

- Car 1: 1 blink
- Car 2: 2 blinks

To change the Car to be operated:

Press/hold the f button for 3 seconds or until the remote beeps and the 🔒 and/or 🔓 LEDs turn on. This will indicate which car the remote currently operates.

- Car 1: 1 beep and Arm LED on
- Car 2: 2 beeps and Arm & Disarm LEDs on

Change Car: While the LEDs are on Press and release the f button. The LEDs will change to indicate the car that can be operated. Once the car number is selected you can press any command button to operate the system. The selected car remains selected until the setting is changed.

Adjusting the onboard shock sensor

The new Responder LE system has an onboard shock sensor that is remote adjustable. Adjusting the onboard sensor can be performed by an authorized dealer (recommended) or by a programmed remote transmitter.

Transmitter adjustment:
Disarm the unit and exit Valet Mode if ON. Turn the ignition off and close all entry points (door, hood, trunk).

© 2008 Directed Electronics—all rights reserved

Use the following steps to put the control module into sensor adjust mode:

- Press/hold the *f* button of the remote control for 8 seconds or until the Amber LED turns on and you hear one long beep.
- Press/hold the 🔒 button 1.5 seconds or until the amber led flashes once:

The control module will emit one long chirp, enter adjust mode, and send the current level of information back to the transmitter. The remote will beep once and the button LEDs will turn on to indicate the current level.

Press the Arm, Disarm, or Remote Start buttons to adjust the sensor level.

Arm button: Pressing the 🔒 button will increase the sensitivity one level. The siren chirps twice, the remote beeps twice and the LEDs increase in level.

Disarm button: Pressing the button will decrease the sensitivity one level. The siren chirps once, the remote beeps once and the LEDs decrease in level.

Remote Start button: Pressing the button will reset to default level 7. The siren chirp three times, the remote beeps three times and the LEDs reset.

To exit the adjust shock sensor mode from the remote control:

- Press the *f* button. The control module is exited.

To exit the adjust shock sensor mode from the control module:

- Open an entry point or turn on the ignition, the control module will emit one long chirp and tell the remote to exit adjust mode.

© 2008 Directed Electronics—all rights reserved

To exit programming:

Press and release the *f* button any time during programming to go back to the main menu. Press and hold for 1.5 seconds in the main menu to exit programming.

© 2008 Directed Electronics—all rights reserved

What's New

Responder LE is an advanced vehicle security and convenience system with two remote controls - a traditional one-way transmitter, and a 2-way Responder LE remote.

Some main features of the Responder LE system

Vehicle Security

- Fail-Safe Starter Kill
- Double-Guard Shock Sensing
- Door, hood, and trunk* monitoring
- Revenger multi-tone siren
- Status LED indicator and valet/override switch

Keyless Entry

- Door locking/unlocking via remote control *
- Driver's door priority unlocking
- Trunk or hatch release *
- Power sliding door control *

Remote Start

- Long-range operation
- Hood, brake, and other shutdown inputs
- Timer Starting
- SmartStart time/temperature/voltage mode
- Temperature-dependent defroster control*

*may require optional parts or installation labor

© 2008 Directed Electronics—all rights reserved

Long-time Viper system users will notice the following differences:

Responder LE uses a new rolling-code format we call SuperCode

SuperCode assigns most functions to dedicated buttons, so many features work slightly different. The icons on the buttons are also different. Current Directed remotes won't work with Responder LE systems.

No more simultaneous multiple button presses

Instead, there is now a Function button. Pressing *f* before pressing another button temporarily changes what that button does. For example, pressing and releasing the 🔒 button will usually arm the system.

Pressing and releasing the *f* button once before pressing 🔒 will silently arm the system.

Pressing more than one button at the same time now generates an error tone.

Remote Valet has changed

Now, to enter or exit Valet Mode with the remote:

- Press and release the *f* button twice, and then press the button.

If the system was Armed or Disarmed, it is now in Valet Mode, with the doors unlocked.
If the system was in Valet Mode, it will return to a disarmed state with the doors unlocked.

© 2008 Directed Electronics—all rights reserved

The AUX output numbering has changed

Trunk Release
To activate Trunk Release, press the AUX button for 1.5 seconds.

The Transmit LED will turn on immediately. When the Trunk Release output activates, the remote will play the ascending AUX multi-tone, and the AUX LED indicator will turn on.

Important Note:

The main function of the AUX button is to control the vehicle's trunk or hatch release. Integrating this function is optional and may require additional installation parts and labor. Ask your authorized dealer for details.

There is now a Trunk /Hatch Release output and 3 more AUX outputs: Aux 1, 2, and 3.

- To access AUX 1, press *f* button once, and then press AUX.
- To access AUX 2, press the *f* button twice, and then press AUX.
- To access AUX 3, press the *f* button three times, and then press AUX

There is now a two-car mode with all features available from either car.

When transmitting, the amber transmitter LED at the top of the remote blinks. If the remote is in Car 2 mode, it will blink in groups of two.

To check which Car is selected: See MULTI-CAR CONTROL CAPABILITY section on page 13

© 2008 Directed Electronics—all rights reserved

Using the system

Warning! Safety first

The following safety warnings must be observed at all times:
Due to the complexity of this system, installation of this product must only be performed by an authorized Directed dealer.

When properly installed, this system can start the vehicle via a command signal from the remote control transmitter. Therefore, never operate the system in an enclosed area or partially enclosed area without ventilation (such as a garage). When parking in an enclosed or partially enclosed area or when having the vehicle serviced, the remote start system must be disabled using the installed toggle switch. It is the user's sole responsibility to properly handle and keep out of reach from children all remote control transmitters to assure that the system does not unintentionally remote start the vehicle. THE USER MUST INSTALL A CARBON MONOXIDE DETECTOR IN OR ABOUT THE LIVING AREA ADJACENT TO THE VEHICLE. ALL DOORS LEADING FROM ADJACENT LIVING AREAS TO THE ENCLOSED OR PARTIALLY ENCLOSED VEHICLE STORAGE AREA MUST AT ALL TIMES REMAIN CLOSED. These precautions are the sole responsibility of the user.

Remote starters on manual transmission vehicles operate differently than those with automatic transmission because you must leave your car in neutral. You must read this Owner's Guide to familiarize yourself with the proper procedures regarding manual transmission remote starters. If you have any questions, ask your installer or contact Directed at 1-800-753-0600.

Before remote starting a manual transmission vehicle, be sure to:

- Leave the vehicle in neutral and be sure no one is standing in front or behind the vehicle.
- Only remote start on a flat surface
- Have the parking brake fully engaged

© 2008 Directed Electronics—all rights reserved

Use of this product in a manner contrary to its intended mode of operation may result in property damage, personal injury, or death. (1) Never remotely start the vehicle with the vehicle in gear, and (2) Never remotely start the vehicle with the keys in the ignition. The user must also have the neutral safety feature of the vehicle periodically checked, wherein the vehicle must not remotely start while the car is in gear. This testing should be performed by an authorized Directed dealer in accordance with the Safety Check outlined in the product installation guide. If the vehicle starts in gear, cease remote start operation immediately and consult with the authorized Directed dealer to fix the problem.

After the remote start module has been installed, contact your authorized dealer to have him or her test the remote start module by performing the Safety Check outlined in the product installation guide. If the vehicle starts when performing the Neutral Safety Shutdown Circuit test, the remote start unit has not been properly installed. The remote start module must be removed or the installer must properly reinstall the remote start system so that the vehicle does not start in gear. All installations must be performed by an authorized Directed dealer.

OPERATION OF THE REMOTE START MODULE IF THE VEHICLE STARTS IN GEAR IS CONTRARY TO ITS INTENDED MODE OF OPERATION. OPERATING THE REMOTE START SYSTEM UNDER THESE CONDITIONS MAY RESULT IN PROPERTY DAMAGE OR PERSONAL INJURY. YOU MUST IMMEDIATELY CEASE THE USE OF THE UNIT AND SEEK THE ASSISTANCE OF AN AUTHORIZED Directed DEALER TO REPAIR OR DISCONNECT THE INSTALLED REMOTE START MODULE. DIRECTED WILL NOT BE HELD RESPONSIBLE OR PAY FOR INSTALLATION OR REINSTALLATION COSTS.

© 2008 Directed Electronics—all rights reserved

Arming the system

To arm the system, press the 🔒 button on the remote control.

The siren in the vehicle will “chirp” once and the parking lights will flash once. If the power door locks have been connected, the doors will lock. The system will automatically check for errors when it arms. The 2-way remote will “chirp” once and blink the LOCK indicator to confirm arming. If no arm confirmation is received, the remote will give the Out-Of-Range signal.

If errors are found when arming:

If an alarm trigger zone – such as a door, the trunk, the hood, or a sensor, was active at the time of arming, the system will “bypass”, or ignore, this trigger zone. This allows the system to continue to protect your vehicle using the remaining trigger zones.

You are notified of this active zone immediately after arming the system. The siren in the vehicle will “chirp” again and the parking lights will flash again. The Status LED indicator in the vehicle will blink in a pattern to indicate the active zone number error which was found (See Table of Zones on page 36). The 2-way remote control will sound a short “error” tone, and blink the LOCK and Function indicators.

Arming without the chirp (Silent Arm)

Press the *f* button at the bottom of the remote once, and then press the 🔒 button. The system will arm without the confirmation chirp. The parking lights will flash once. The 2-way remote will blink the LOCK indicator to confirm arming. If no arm confirmation is received, the 2-way remote will give the Out Of Range signal.

© 2008 Directed Electronics—all rights reserved

While the system is armed

- Fail-Safe Starter Kill

The starter is disabled by the system's Fail-Safe starter kill.

Alarm Responses

The security system can generate two levels of alarm: Warn Away - Soft siren chirps and flashing parking lights.

The purpose of Warn-Away is to warn a would-be thief next to your vehicle that the vehicle is protected, but in a manner that does not call attention to it from more than a few feet away.

Full Alarm Trigger

Sounds the siren at maximum volume and flashes the parking lights. The default duration of the Full Alarm is 30 seconds. This can be programmed to any duration from 30 to 60 seconds manually. Ask your authorized dealer for details.

Pages the 2-way remote control. If in range, the 2-way remote will blink its indicator lights and sound the Revenger siren tones.

Warn-Away response is triggered by:

- Lesser or lighter vibrations or impacts (detected by the Stinger Doubleguard shock sensor)
- Opening a door: the Progressive Door Trigger feature will sound the Warn Away response, followed immediately by Full Alarm
- Any attempt to start the car: the Progressive Ignition Trigger will first sound the Warn Away response, followed immediately by Full Alarm.
- An optional Proximity Sensor (508D) triggered in the *outer* zone.

© 2008 Directed Electronics—all rights reserved

Full Alarm response is triggered by:

- Heavier impact to the vehicle (detected by the Stinger Double-Guard shock sensor).
- Opening the trunk or hood.
- Opening a door: the Progressive Door Trigger feature will first sound the Warn-Away response, followed immediately by Full Alarm.
- An optional sensor, such as an optional Proximity Sensor triggered in the *inner* zone.

Paging Signals
If the Full Alarm response is triggered, the 2-way remote control will be sent a paging signal by the in-car system.

> **Note:** Call the police immediately if you witness a crime in progress. Paging range varies with terrain and environmental conditions.

When the 2-way remote receives a Full Alarm paging signal, the remote will play Revenger siren tones and the indicator lights will flash.

Sensor Page Signal

- Transmit LED: solid for Car 1, flashes for Car 2
- Green LEDs alternately
- Red Function LED ***flashes*** for Sensor triggers

Point of Entry Page Signal

- Transmit LED: solid for Car 1, flashes for Car 2
- Green LEDs flash alternately Red Function LED lights ***solid*** for door, hood, or trunk triggers

© 2008 Directed Electronics—all rights reserved

Modified Arming Modes

The Responder LE gives you an unprecedented level of control over how it will protect your car. “Normal arming” means that all the Responder LE security features are active automatically. You can turn some security features off on a one-time basis.

Turning off the Warn Away response
After arming, you can turn off the Warn-Away response on a one-time basis.

1. Press the *f* button twice.

2. Press the 🔒 button.
The 🔒 LED flashes and the remote sounds an error tone.

Now, slight impacts or vibrations will not trigger Warn-Away. Heavy impacts will still trigger Full Alarm.

Note: The next time you arm the system, Warn-Away will work normally.

Turning off the Sensor Full Trigger response
You can completely disable the Stinger Doubleguard Shock Sensor and any added optional sensors on a one-time basis. The entry points (doors, hood, etc.) will still be monitored. All sensors will not be able to trigger the Warn-Away response or the Full Alarm response.

1. After disabling Warn-away response, press the *f* the button twice.

2. Press the 🔒 button.

Note: The next time you arm the system, the shock sensor will work normally.

© 2008 Directed Electronics—all rights reserved

Silent Mode 2 - Turning off the siren
You can turn off the vehicle siren and flashing lights on a one-time basis, leaving the system's paging feature as the only alarm response.

> **Note:** Call the police immediately if you witness a crime in progress. Paging range varies with terrain and environmental conditions.

Full Silent Mode.
In this mode, the siren cannot be triggered, but any trigger will cause the 2-way remote to be paged.

- Press the f button four times, and then press the 🔒 within five seconds.

Sensor Silent Mode
In this mode, a sensor cannot trigger the siren, but will cause the 2- way remote to be paged. All entry points (doors, hood, etc.) will still trigger the siren.

- Press the f button three times, and then press the 🔒 button.

Note: The next time you arm the system, it will function normally.

Disarming the System

While the system is armed normally:
- Press the button once.

The siren in the vehicle will "chirp" twice, and the parking lights will flash. The 2-way remote will "chirp" **twice** and the LED indicator will blink.

If you hear **four** chirps on disarming, the system was triggered in your absence. Immediately look at the Status LED in the vehicle and count the number of flashes between pauses. This number is important, it tells what triggered your alarm. See Disarming section under Diagnostics on page 34 for more details.

© 2008 Directed Electronics—all rights reserved

If you hear **five** chirps on disarming, the system was repeatedly triggered in your absence. Immediately look at the Status LED in the vehicle and count the number of flashes between pauses. This number is important, it tells what triggered your alarm.

The door locks (if connected) will unlock, and the parking lights will flash.

While the alarm is triggering:

■ Press the button on the remote. The siren will stop sounding and disarm the alarm system.

High-Security Disarming
If you want the Full Alarm response to stop without unlocking the doors, press the button. The system will re-arm and the current alarm response will reset.

System override

To disarm the system without a remote control:
You will need to use your Override Switch located on your systems control center (see diagram below) to disarm the system. The Override Switch disarms the system only if you have the vehicle key.

To check proper operation:

■ Open the door. The alarm will sound.
Immediately insert the key into the ignition and turn it to the RUN or ON position. (all the indicators in the dash will turn on).

■ Press the Override Switch once.
Note: The Override Switch feature allows you to select a specific number of presses needed to disarm the alarm. If the Override

© 2008 Directed Electronics—all rights reserved

Switch has been programmed to a new number of presses by your authorized dealer, that number should be indicated below.

Override Switch Number _____

Using the remote start

Before using your Remote Start

Read this user guide, including the warnings on page 24.
Ensure that the vehicle is parked in the open air and not in a garage. To use your remote start to pre-warm or pre-cool your vehicle, remember to set the climate controls to the desired settings before shutting off the engine.

Remote starting your vehicle

- Press the button on the remote control. The vehicle parking lights flash.
- On the 2-way remote, the Remote Start indicator blinks and ascending Remote Start tone plays.

The preset remote start run time is 12 minutes. This can be changed to between 12 and 60 minutes (see your authorized dealer for programming changes).

Your system has a feature (if programmed on) that will automatically notify you when the run time is running low. When 9 minutes (of the 12 minute default) runtime has elapsed, the system sends the 2-way remote control a paging signal. The 2-way remote beep once, plays the error beep once, and then the Remote Start and Function indicator lights will blink.

© 2008 Directed Electronics—all rights reserved

Points to remember

If the hood is open or is the brake pedal is pressed, the vehicle will not start using remote start. The remote starter shuts down:

- When the brake pedal is pressed
- The hood is opened
- If the alarm is triggered when armed.
- When the Remote Start command is sent again from a remote control

Runtime Check

To check the amount of runtime remaining:

After the vehicle is remote started, press the *f* button three-times and then hold until the remote beeps, and then release. The LEDs light up to indicate how much time is remaining.

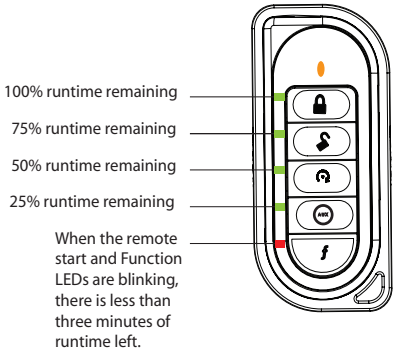

© 2008 Directed Electronics—all rights reserved

Manual transmission

If the vehicle has manual transmission the proper steps must be followed before leaving the parked vehicle or the remote start feature is disabled.

1. Put the transmission in neutral.
2. Press on the vehicle's foot brake.
3. Apply the emergency brake.
4. Release the vehicle's foot brake.
   Note: Pressing the brake again after this step will disable the remote start feature.
5. Within 15 seconds activate the remote start from the remote.
6. The parking lights will flash confirming that the remote start is active.
7. Turn off the ignition (the car should stay running when key is turned off).
8. Exit the vehicle.
9. Arm the alarm (the vehicle should shut off when arming the system).

You can now remote start the vehicle. If a door is opened or if the alarm is triggered before the next remote start activation the system will not remote start.

To drive your vehicle after it has been remote started:

1. Get in without stepping on the brake.
2. Insert the ignition key and turn it to the ON position.
3. Now, step on the brake.

The remote control will play the remote start shutdown tone. You have now taken direct control from the remote start system.

© 2008 Directed Electronics—all rights reserved

Timer mode

To activate the runtime of the vehicles engine during remote start:

1. Press the *f* button two-times and then .
2. The vehicle will confirm with 4 fast parking light flashes.
3. The system will start every 3 hours until canceled by the brake, hood, or neutral safety shut-down wires. The remote will respond with the Start and Stop remote start notification during each Start and Stop of the Vehicle while in Timer mode.

   Important! Timer Mode should be used only in open areas. Never start and run the vehicle in an enclosed space such as a garage or carport.

To exit timer mode, Press the *f* button two-times and then again.

Turbo timer mode

Turbo timer mode keeps the engine running after arriving at your destination for a programmable period of 1, 3, 5 or 10 minutes. This allows the system's timer to conveniently cool down the turbo after you have left the vehicle.

Transmit the timer mode feature with the remote while the engine is running, press *f* two-times and then . After exiting the vehicle, arm the alarm and the vehicle will remain running for the programmed runtime. (The remote start feature is still enabled).

The system monitors the engine speed and will automatically shut the engine off if the RPMs rise above or fall below the programmed levels. This feature prevents damage to the motor due to fuel delivery system failures or other problems which may cause the engine to race.

Note: To enter turbo timer mode with a manual transmission, perform the manual transmission procedure (See p.29), with the door open.

© 2008 Directed Electronics—all rights reserved

Cabin temperature

Using the Responder LE system, you have the ability to check the temperature inside the vehicle.

Press the *f* button once and then hold until the remote beeps, and then release. The LEDs on the remote will light up indicating what the temperature range of the vehicle is.

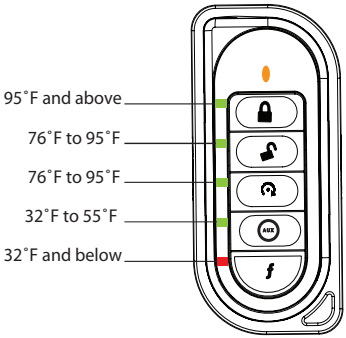

Rear defogger

The rear defogger (if connected) is programmed to automatically activate when remote start is turned on. If the interior cabin temperature is above 55˚ F the defogger will not activate.

To manually activate the rear defogger after remote start is on:

Press *f* four times, and then .

Valet take-over

The Valet take-over feature allows the vehicle to remain running after the key has been removed from the ignition. This feature is useful for occasions when you wish to exit and lock the vehicle for short periods

© 2008 Directed Electronics—all rights reserved

of time, but would like to leave the motor running and the climate controls on.

To perform Valet take-over:

1. Before turning off the engine, press and release within 3 seconds on the transmitter. Then wait a few seconds.
2. Turn the ignition key to the OFF position (The engine will stay running).
3. The engine will run until the pre-programmed time elapses or a shut-down input is received.

Note: To enable Valet take-over with a manual transmission, open the door when going into a manual transmission mode. After you exit the vehicle you can arm the alarm and the car will remain running. If the vehicle shuts down when arming, then the unit did not enter the valet take-over mode.

© 2008 Directed Electronics—all rights reserved

Safety features

This system has several important safety features to ensure proper operation of the motor and prevent accidental damage to the engine or its components.

Starter anti-grind circuitry

Whenever the vehicle is remote started, advanced anti-grind circuitry prevents the starter from engaging, even if the key is turned to the start position. This prevents damage to the starter motor if the key is turned to the start position during remote start operation.

> **Note:** Anti-grind circuitry only works when the remote start system is operating the motor and the Failsafe® Starter Kill relay is installed.

Disabling the remote start system

This feature allows the remote start unit to be temporarily disabled to prevent the vehicle from being remote started accidentally. This feature is useful when the vehicle is being serviced or stored in an enclosed area.

To disable the remote start, move the shutdown toggle switch to the OFF position. Check with your installer for the location.

Location of Shutdown Switch_____

© 2008 Directed Electronics—all rights reserved

Diagnostics

The microprocessor at the heart of your system is constantly monitoring all of the switches and sensors connected to it. It is designed to detect any faulty switches and sensors and prevent them from disabling the entire system. The microprocessor will also record and report any triggers that occurred during your absence.

Refer to System Status Chirps and Table of Zones sections of this guide for diagnostic information.

Arming

If the security system is armed at the same time that an input is active (such as a door opening or sensor triggering), you will hear one siren chirp to indicate arming and a second siren chirp to indicate Bypass Notification.

A Bypass Notification chirp means that the security system ignores the input that was active when the system was armed, until that input ceases. Three seconds after that input ceases, the security system will resume normal monitoring.

For example, if your vehicle has an interior light exit delay and you arm your security system before the interior light turns off, you may hear a second Bypass Notification chirp.

Once the light turns off, however, the security system resumes normal monitoring.

> **Note:** Bypass Notification does not occur when the system is in Silent Mode or if the notification chirps have been programmed off by the installer.

© 2008 Directed Electronics—all rights reserved

Disarming

Extra chirps heard when disarming the system are the Tamper Alert. If four chirps are heard when disarming the system, then the security system was triggered in your absence.

If five chirps are heard when disarming the system, the system was triggered so many times that the Nuisance Protection® Circuitry has bypassed the intended zone. In either case, the status LED will indicate which zone was involved (see Table of Zones).

The security system will retain this information in its memory, and chirp four or five times each time it is disarmed, until the next time that the ignition is turned on.

System status chirps

The siren will chirp when arming/disarming the system. The pattern of chirps will audibly report the system's status as described below.

Action	Number of Chirps	Description
Arm	1	System armed
Arm	1 (3-second delay)	System armed with bypass notification
Disarm	2	System armed
Disarm	4	System disarmed with Tamper Alert
Disarm	5	System disarmed

© 2008 Directed Electronics—all rights reserved

Table of zones

A zone is represented by the number of LED flashes used by the system to identify a particular type of input. Standard input assignments are listed in the following table, along with spaces to write in any optional sensors or switches that have been installed.

Zone	Description	Dealer installed options
1	Trunk Pin	
2	Instant trigger: a heavier impact detected by the shock sensor	
3	Door switch trigger	
4	Instant trigger: For optional sensors	
5	Ignition trigger	
6	Hood Pin	

Interpreting zone diagnostics

Warn Away responses are not reported by arming or disarming diagnostics. If you receive a Bypass notification when arming or a Tamper Alert notification when disarming, look at the LED.

Active or triggered zones will be indicated by a pattern of blinks by the LED.

For example: If zone 3 was active or triggered, the LED will blink three times with a two-second pause. Then it will blink three times again, and repeat until the ignition is turned on.

© 2008 Directed Electronics—all rights reserved

Nuisance prevention® circuitry

Your system has Directed's Nuisance Prevention® Circuitry (NPC). It prevents annoying repetitive trigger sequences due to faulty door pin switches or environmental conditions such as thunder, jackhammers, airport noise, etc.

For example: If the alarm triggers three times within a 60-minute period and each time the same sensor or switch triggers the alarm, NPC will interpret those triggers as false alarms. After the third trigger, NPC ignores, or bypasses, that sensor or switch (along with any other sensors or switches sharing the same zone) for 60 minutes.

If the bypassed sensor tries to trigger the security system while it is being bypassed, the 60-minute bypass period will start over. This ensures that a sensor that is continually being triggered will remain bypassed.

The vehicle doors are protected by NPC differently. If your security system is triggered by an open door for three full cycles, the system will bypass the doors until the trigger ceases.

© 2008 Directed Electronics—all rights reserved

Owner recognition

Owner Recognition lets up to four users of the system have unique settings that meet their specific needs. It is almost like having four separate alarms in your vehicle, one for each user. This feature is only available to authorized dealers using the Bitwriter or Bitwriter 2 program tool.

Rapid resume logic

This Directed system will store its current state to non-volatile memory. If power is lost and then reconnected the system will recall the stored state from memory.

For example, if the unit is in Valet Mode and the battery is disconnected for any reason, such as servicing the car, when the battery is reconnected the unit will still be in Valet Mode. This applies to all states of the system including arm, disarm, and Valet Mode.

Power saver mode

System

Your system will automatically enter Power Saver Mode while armed or in Valet Mode, after a period of time in which no operation has been performed. This lowers the current draw on the vehicle's battery. Power Saver Mode takes over under the following conditions:

Power Saver when the system is armed: After the system has been armed for 24 hours the LED will flash at half its normal rate, decreasing the system's current draw.

© 2008 Directed Electronics—all rights reserved

Power Saver in Valet Mode: When the system enters Valet Mode the Status LED on the Responder LE control center illuminates steadily. If the vehicle is not used (ignition is not turned on) for a one hour period while the system is in Valet Mode, the status LED will shut off. If the system remains in Valet Mode, the LED will come back on the next time the ignition is turned on and then back off.

2-way remote

Your Responder LE 2way remote control has a feature called remote power save mode. When programmed ON under remote options, the remote will conserve power by disabling the paging function if unused for more than 72 hours. Pressing any button on the remote will restore the paging function.

The default setting is ON. See Remote control programming section of this guide or ask your dealer for details on how to program.

© 2008 Directed Electronics—all rights reserved

Programming options

Your system has many custom programmable options. Some may require installation labor. Ask your authorized dealer for details.

The following is a list of the programmable options, with the factory settings in Bold.

■ **Active** arming (remote only) passive arming with or without locking the doors (automatic arming without locking the doors 30 seconds after the last door has been closed), or Auto Re-arm with or without locking the doors (Automatically arms 60 seconds after disarm if no door is opened).

Arming/disarming siren chirps **ON** with or without Warn-away chirps, Or OFF with or without Warn-away chirps.

■ Ignition controlled door lock feature **ON** or OFF: When this feature is programmed on, the doors will lock three seconds after the ignition is turned on, and unlock when the ignition is turned off.

If your installer is programming the security system with the Directed Bitwriter®, ignition lock and unlock are independent features that can be programmed separately.

■ **Panic mode enabled/**disabled when the ignition is turned on or completely turned OFF. (Some states have laws against sirens sounding in moving cars.)

■ **Full trigger response 30 or 60 seconds:** This determines how long the full triggered sequence lasts. Some states have laws regulating how long a security system can sound before it is considered a nuisance.

© 2008 Directed Electronics—all rights reserved

If your installer is programming the security system with the Directed Bitwriter®, the full triggered response can be programmed for any duration ranging from 1 to 180 seconds.

■ **Siren tones and chirp volume:** The output of the Revenger™ Soft Chirp™ siren consists of six different tones in sequence. Any of these tones can be eliminated by a dealer, resulting in a unique, easily identifiable siren sound. The chirps can be either full volume or 6 decibels quieter than the full alarm blast.

■ **Comfort closure** is a programming option which closes the vehicle's windows after remote locking.

© 2008 Directed Electronics—all rights reserved

Security & convenience expansions

Listed below are some of the many expansion options available. Please consult your dealer for a complete explanation of all the options available to you.

Audio Sensor: Metal on glass, glass cracking, and breaking glass produce distinctive acoustic signatures. The 506T audio sensor uses a microphone to pick up sounds, then analyzes them with proprietary acoustic software to determine if the glass has been struck.

Backup Battery: The 520T keeps the system armed, triggers the alarm and keeps the starter interrupt active if main battery is disconnected.

Digital Tilt Sensor: The 507M tilt sensor can be added to your system to protect your car when its parked. It can protect your vehicle from being lifted and provide protection for your expensive rims.

Field Disturbance Sensor: An invisible dome of coverage is established by installing the 508D "radar" sensor. Your system can react to any intrusions into this field with the full triggered sequence.
Power Locks: This system offers lock outputs that can control some manufacturers' power door lock systems. For other systems, additional parts may be required.

Hood Lock: Prevents the vehicle's hood from being opened without a key, keeping thieves away from the system's siren, the battery connections, and other components under the hood.

Power Trunk Release: The accessory output of the system can operate a factory power release for the vehicle's trunk or hatch. Although the on-board relay can control most power trunk releases, sometimes an optional relay is required. If the factory release is not power-activated, Directed®'s 522T trunk release solenoid can often be added.

Power Window Control: Automatic power window control is provided with the 529T and 530T systems. These can operate power windows,

© 2008 Directed Electronics—all rights reserved

and can roll them up automatically when the system is armed, roll them down, or both up and down.

Ultrasonic Cabin Sensor: Using the 509U Ultrasonic cabin sensor provides a field of protection inside the car to protect your belongings.

© 2008 Directed Electronics—all rights reserved

Glossary of Terms

2-Way Remote: A hand-held, remote control which operates the various functions of your system and receives feedback and pages from the alarm system.

Control Center: The control center contains the system's radio-frequency antenna, the valet and override switch, and the Status LED. For maximum remote-control range, the Control Center is usually located at the top of the windshield, centered near the rear-view mirror.

Control Module: The "brain" of your system. Usually hidden underneath the dash area of the vehicle. It houses the microprocessor which monitors your vehicle and controls all of the alarm's Functions.

Failsafe® Starter Kill (if equipped): An automatic switch controlled by the security system which prevents the vehicle's starter from cranking whenever the system is armed. The vehicle is never prevented from cranking when the system is disarmed, in Valet® Mode, or should the starter kill switch itself fail. Your system is ready for this feature, however installation of this feature may require additional labor.

Input: Any physical connection to the security system. An input can be provided through a sensor, pin-switch or by existing systems in the vehicle, such as ignition or courtesy lights.

In-vehicle status LED: A light used to indicate the status of your system. It is located on your systems control center.

Shock Sensor: This system has a dual zone shock sensor. This sensor is mounted in the vehicle and designed to pick up impacts to the vehicle or glass.

Trigger or Triggered Sequence: This is what happens when the alarm "goes off " or "trips." The triggered sequence of your system consists of the siren sounding and parking lights flashing for the programmed duration.

© 2008 Directed Electronics—all rights reserved

Valet Button: A small push button switch located on your systems control center. It is used to override the starter interrupt when a 2-way remote is lost or damaged, or to enter or exit Valet Mode.

Warn Away® Response: Light impacts to the vehicle generate the Warn Away® Response, which consists of several seconds of horn honks and flashing parking lights.

Zone: A zone is a separate input that the alarm can recognize as unique. Each input to the system is connected to a particular zone. Often, two or more inputs may share the same zone.

© 2008 Directed Electronics—all rights reserved

Quick Reference Guide

Cut along dotted line and fold for a quick and easy reference to keep in purse or wallet.

- Arming
  To arm, press . When the system arms, the LOCK LED blinks for one second, with 1 beep and siren tone.

- Arming while driving
  To arm the system while driving, press on your remote while the vehicle is running. The LOCK LED blinks for one second.

- Disarming
  To disarm, press . The UNLOCK LED blinks for one second, and you will hear 2 beeps.

- Disarming without a remote
  Turn on the ignition. Press the Valet button within 15 seconds. The system should now disarm. If it does not, you may have waited too long or pressed the button incorrect number of times. Refer to reverse side for Valet pushes and try again.

  Number of Valet button pulses for disarming_____

- Silent Arm
  Press f one time and then press . Arm LED will blink for one second with no sound.

- Silent Disarm
  Press f one time and then press . Disarm LED will blink for 1 second with no sound.

© 2008 Directed Electronics—all rights reserved

■ Remote Start
Press . Remote start LED blinks for 3 seconds and remote start tone sounds.

■ Rear Defogger
Press f four times, and then press (only after remote start is ON.) Remote start LED turns ON, and you will hear 1 beep.

■ To disable the remote start system

Move the shutdown toggle switch to the OFF position.

Location of Shutdown Toggle Switch_____

■ Valet Mode

Press f two times and then . The UNLOCK LED and Function LED blink and remote beeps one time. When valet Mode OFF, the remote beeps two-times.

■ Valet take over

Before turning off the engine, press and release . within 3 seconds. Then wait a few seconds.
Turn the ignition key to the OFF position.
The engine will remain running until the programmed time elapses or a shut-down input is received.

Location of Valet button_____

Cut along dotted line and fold for a quick and easy reference to keep in purse or wallet.

The company behind this system is Directed Electronics

Since its inception, Directed Electronics has had one purpose, to provide consumers with the finest vehicle security and car stereo products and accessories available. The recipient of nearly 100 patents and Innovations Awards in the field of advanced electronic technology.

Directed is ISO 9001 registered.

Quality Directed Electronics products are sold and serviced throughout North America and around the world.

Call (800) 274-0200 for more information about our products and services.

Designed and Engineered in the USA

Directed®
ELECTRONICS

G5202V 2008-01

Vista, CA 92081
www.directed.com
© 2008 Directed Electronics—All rights reserved